11th Edition

MARK IS THE SYMBOL OF HIGH TECHNOLOGY, HIGH FIDELITY AND HIGH PRECISION

Professional Electronic Components

(株)벨톤研究所

Analog & Digital Reverberation Unit

Rotary Switch & Rotary Digital Code Switch

Mech. & Optical Encoder Switch

Vacuum Tube Socket & Tube Shield

Power Entry, Jack & XLR Socket

BELTON

CONTENTS

● REVERBERATION UNIT ..... p2 ~ p12

- 2 ~ 3 Springs Reverberation unit
- Small and Large type
- With and Without outcase type
- With and Without tray type

● DIGITAL SOUND EFFECTOR ..... p13 ~ p19

- 16 internal ROM programs consisting of halls, rooms, plates, delays, chorus, flange, vocal cancel, and rotary speaker emulation

● ROTARY & DIGITAL CODE SWITCH ..... p20 ~ p39

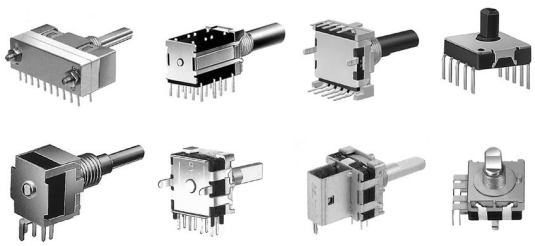

- 10Ø Multi-function rotary switch
- 10 & 16Ø Switch for horizontal mounting
- 12 & 18Ø Switch for vertical mounting
- 10 & 20Ø Digital code rotary switch

● ROTARY ENCODER SWITCH ..... p40 ~ p50

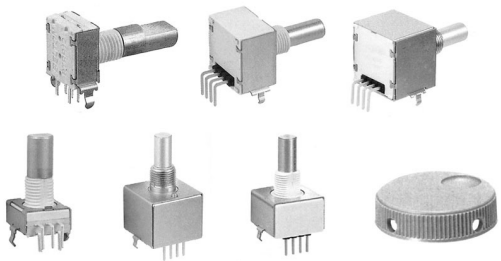

- 12 mm Mechanical pulse switch
- 18 mm Optical Encoder switch
- 20 mm Optical Encoder switch
- 30 mm Diameter knob for Rotary switch

CONTENTS

● VACUUM TUBE SOCKET ..... p51 ~ p58

- 8 ~ 9pin Vacuum Tube socket for auto-wave soldering
- 8 ~ 9pin miniature conventional wiring and PCB type socket
- Tube shield and Tube retainer for 8 & 9pin tube socket

● POWER ENTRY MODULE ..... p59 ~ p63

- AC inlet with 1 fuse holder
- AC inlet with 2 fuse holder
- Compact AC inlet with 1 fuse holder

● JACK & SOCKET ..... p64 ~ p86

- 1/4” Phone jack
- XLR Socket
- XLR+1/4” Combo jack
- XLR+1/4”+1/4” Combination jack
- Speaker connector

※ All Belton products are in compliance with RoHS (EU directive 2002/95/EC)

ANALOG & DIGITAL REVERBERATION UNIT

- General specification ..... 3~4
- Mini size reverberation unit ..... 5~6
- Small size reverberation unit ..... 7~10
- Large size reverberation unit ..... 11~12
- Digital reverberation unit ..... 13~19

A full rich, sweet sound of reverb throughout the audio frequency range

Features

- 2-3 natural coil spring type
- In-out put impedance are changeable
- Small and Large size are available

Applications

- For electric organs, guitar amplifier
- For professional audio mixer
- For system to control room acoustics

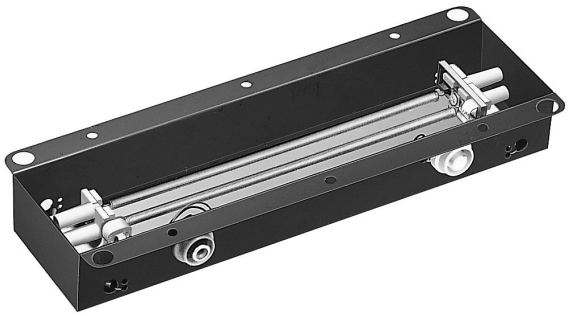

• 2 Springs Type

Input Impedance		Output Impedance		Decay Time		Connectors		Locking Device		Mounting Plane	
8 Ohm	A	500 Ohm	A	Short	1	Input Grounded Output Grounded	A	No Lock	1	Horizontal Open Side Up	A
150 Ohm	B	2250 Ohm	B	Medium	2	Input Grounded Output Insulated	B			Horizontal Open Side Down	B
200 Ohm	C	4000 Ohm	c	Long	3	Input Insulated Output Grounded	C			Vertical Connectors Up	C
250 Ohm	D	10000 Ohm	D			Input Insulated Output Insulated	D			Vertical Connectors Down	D
600 Ohm	E					10″ Leads No Outer Channel	E			On End Input up	E
1475 Ohm	F					3″ Leads No Outer Channel	F			On End Output up	D
1925 Ohm	G									Tray	T

• 3 Springs Type

Input Impedance		Output Impedance		Decay Time		Connectors		Locking Device		Mounting Plane	
10 Ohm	A	600 Ohm	A	Short	1	Input Grounded Output Grounded	A	No Lock	1	Horizontal Open Side Up	A
190 Ohm	B	2575 Ohm	B	Medium	2	Input Grounded Output Insulated	B			Horizontal Open Side Down	B
240 Ohm	C	4000 Ohm	C	Long	3	Input Insulated Output Grounded	C			Vertical Connectors Up	C
310 Ohm	D	12000 Ohm	D			Input Insulated Output Insulated	D			Vertical Connectors Down	D
800 Ohm	E					10″ Leads No Outer Channel	E			On End Input up	E
1925 Ohm	F					3″ Leads No Outer Channel	F			On End Output up	F

Belton Engineering Co., Ltd.

Unit 1208, Daerung Techno town 8,
481-11, Gasan-Dong,
Geumcheon-Gu, Seoul, Korea

TEL : (822)2163-0060~0065
FAX : (822)2163-0066
E-mail : belton@unitel.co.kr

REVERBERATION UNIT
ROTARY SWITCH
ENCODER SWITCH
VACUUM TUBE SOCKET & SHIELD
POWER ENTRY
JACK & XLR SOCKET

Suggested Ordering Procedure

- To specify the reverberation unit required, please compose desired part numbers from data below and fill the specification you desire in the following square.

Example (with outcase type)

Logo. of BELTON	Size	Type	No. of spring	Input imp.	Output imp.	Decay	Connect	Lock	Mount
B	S	N	2	A	B	2	C	1	B

B-abbreviation of BELTON

SIZE
M-MINI
S-SMALL
L-LARGE

TYPE
EMPTY-OLD VERSION
N -NEW VERSION

NO. OF SPRING
2-SPRINGS
3-SPRINGS

INPUT IMP.
SEE BELOW TABLE

OUTPUT IMP.
SEE BELOW TABLE

DECAY TIME
1-SHORT DECAY
2-MEDIUM DEACY
3-LONG DEACY

CONNECT
SEE PAGE 2 TABLE

TRAY
T-WITH TRAY
EMPTY-WITHOUT TRAY

LOCK
SEE PAGE 2 TABLE

MOUNT
SEE PAGE 2 TABLE

Electrical Specifications

• 2 Springs Type

		Impedance @1KHz ± 10%	Inductance In mH ± 10%	DC Resistance In Ohms ± 10%	Recommended AC Drive mA For Approx 3.5A-T
INPUT	A	8 Ohm	1.3	0.9	28.0
	B	150 Ohm	23.0	26	6.5
	C	200 Ohm	32.0	27	5.8
	D	250 Ohm	40.0	36	5.0
	E	600 Ohm	95.0	75	3.1
	F	1475 Ohm	235.0	200	2.0
OUTPUT	A	500 Ohm	80.0	42	Typical Decay Time Short=1.2 to 2.0 Sec Medium=1.75 to 3.0 Sec Long=2.75 to 4.0 Sec
	B	2250 Ohm	350.0	200	
	C	4000 Ohm	630.0	350	

• 3 Springs Type

		Impedance @1KHz ± 10%	Inductance In mH ± 10%	DC Resistance In Ohms ± 10%	Recommended AC Drive mA For Approx 3.5A-T
INPUT	A	10 Ohm	1.5	0.9	28.0
	B	190 Ohm	30.0	26	6.5
	C	240 Ohm	38.0	27	5.8
	D	310 Ohm	43.0	36	5.0
	E	800 Ohm	150.0	75	3.1
	F	1925 Ohm	300.0	200	2.0
OUTPUT	A	600 Ohm	94.0	42	Typical Decay Time Short=1.2 to 2.0 Sec Medium=1.75 to 3.0 Sec Long=2.75 to 4.0 Sec
	B	2575 Ohm	400.0	230	
	C	4000 Ohm	630.0	350	

Belton Engineering Co., Ltd.

Unit 1208, Daerung Techno town 8,
481-11, Gasan-Dong,
Geumcheon-Gu, Seoul, Korea

TEL : (822)2163-0060~0065
FAX : (822)2163-0066
E-mail : belton@unitel.co.kr

ELECTRONIC REVERBERATION UNIT

BELTON

(BMN SERIES) **(Miniature size)** CAT. NO.: BMN - 1

BMN2 series

PATENT

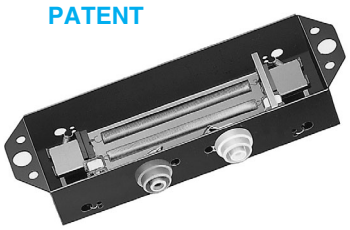

- 2 short springs reverb unit
- Mini-size with plenty of reverb sound

BMN3 series

- 3 short springs reverb unit
- Mini-size with smooth and rich reverb sound

Dimensions

BMN2AB2C1B

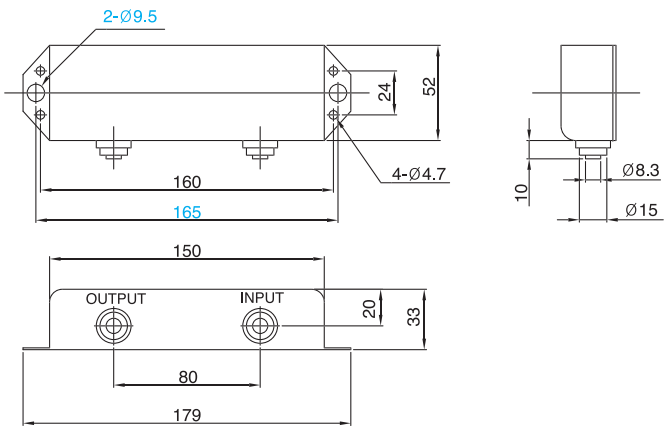

BMN3AB2C1B

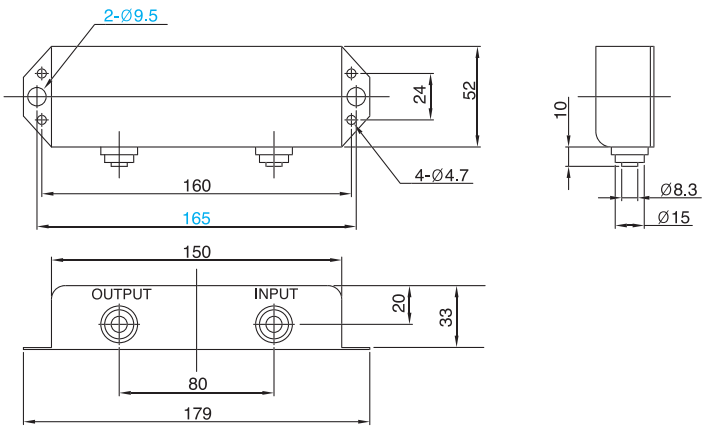

Belton Engineering Co., Ltd.

Unit 1208, Daerung Techno town 8,
481-11, Gasan-Dong,
Geumcheon-Gu, Seoul, Korea

TEL : (822)2163-0060~0065
FAX : (822)2163-0066
E-mail : belton@unitel.co.kr

ELECTRONIC REVERBERATION UNIT

(BMN WITHOUT OUTCASE SERIES) **(Miniature size)** CAT. NO.: BMN - 2

BMN2&3 with tray series

PATENT

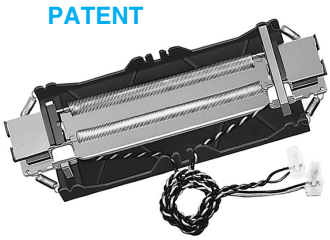

- With bottom tray, can eliminate feed back problem

BMN2&3 without tray series

PATENT

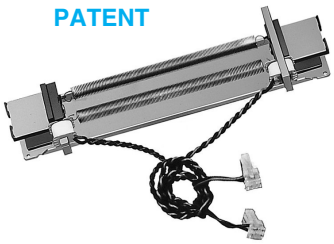

- With thick bottom sponge, can reduce feed back problem

Dimensions

BMN2AB2ET

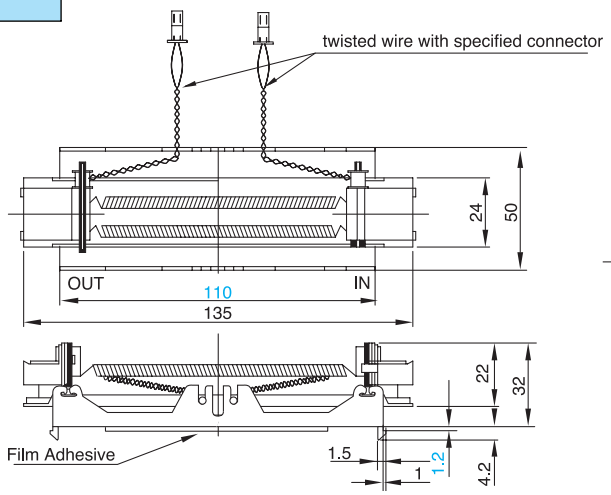

Mounting Hole

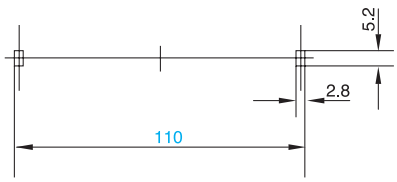

BMN3AB2E

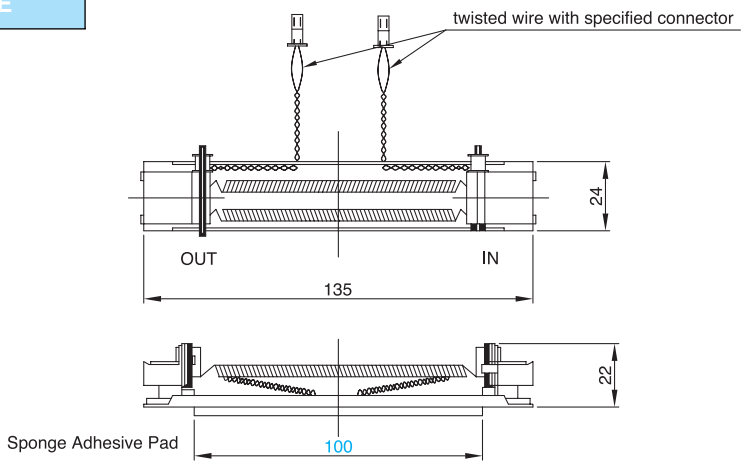

Belton Engineering Co., Ltd.

Unit 1208, Daerung Techno town 8,
481-11, Gasan-Dong,
Geumcheon-Gu, Seoul, Korea

TEL : (822)2163-0060~0065
FAX : (822)2163-0066
E-mail : belton@unitel.co.kr

ELECTRONIC REVERBERATION UNIT

BELTON

(BS SERIES) **(Small size)** CAT. NO.: BS - 1

BS2 series

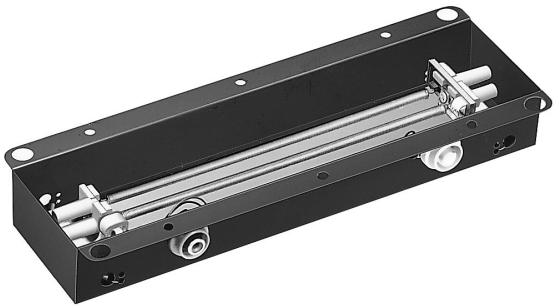

- 2 springs reverb unit
- Reasonable price with good reverb sound
- Suited for student amps and organ

BS3 series

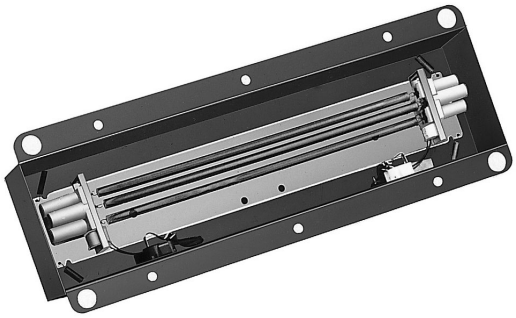

- 3 springs reverb unit
- A full rich and smooth sound
- Can eliminate sound peaks and valley

Dimensions

BS2AB2C1B

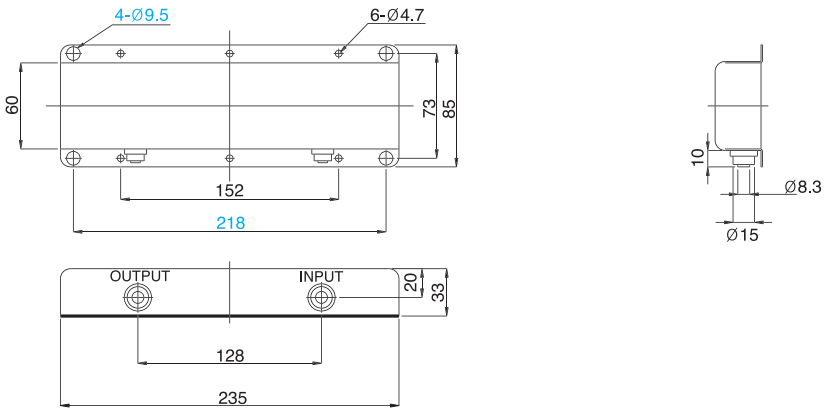

BS3AB2C1B

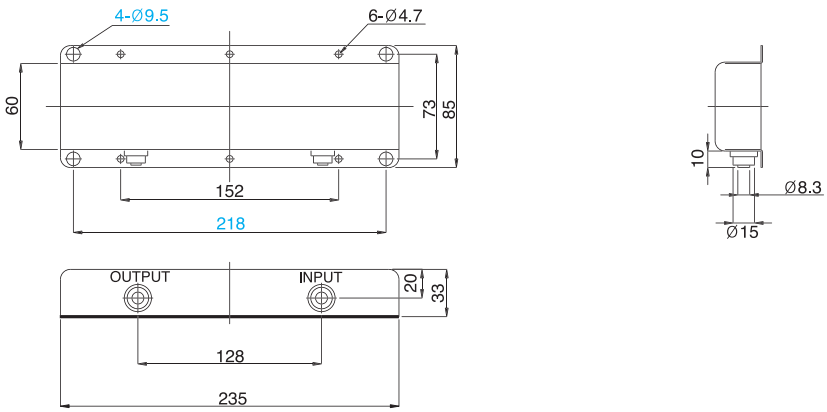

Belton Engineering Co., Ltd.

Unit 1208, Daerung Techno town 8,
481-11, Gasan-Dong,
Geumcheon-Gu, Seoul, Korea

TEL : (822)2163-0060~0065
FAX : (822)2163-0066
E-mail : belton@unitel.co.kr

ELECTRONIC REVERBERATION UNIT

(BS WITHOUT OUTCASE SERIES) **(Small size)**

CAT. NO.: BS - 2

BS2&3 with tray series

PATENT

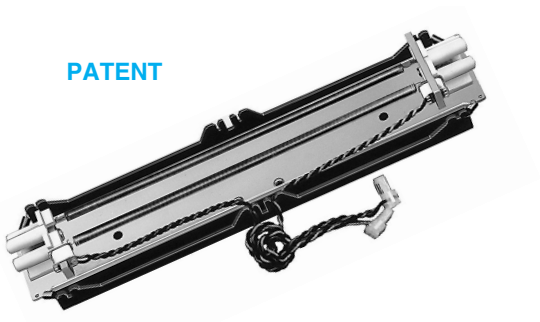

- Without outcase type
- With special designed tray, can eliminate feed back problem

BS2&3 without tray series

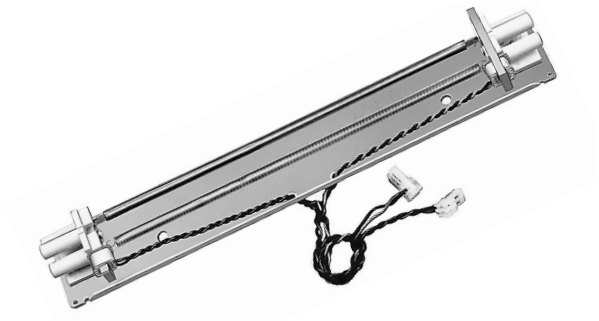

- Without outcase type
- Easy type to use on the P.C.B. by using Bottom adhesive

Dimensions

BS2AB2ET

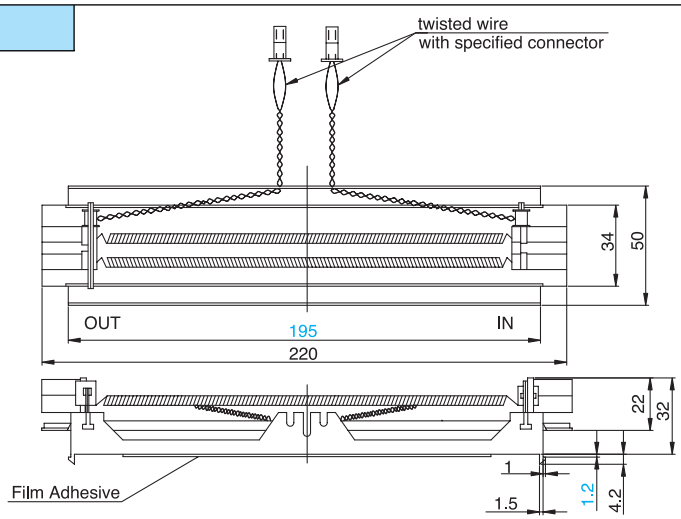

Mounting Hole

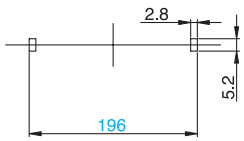

BS3AB2E

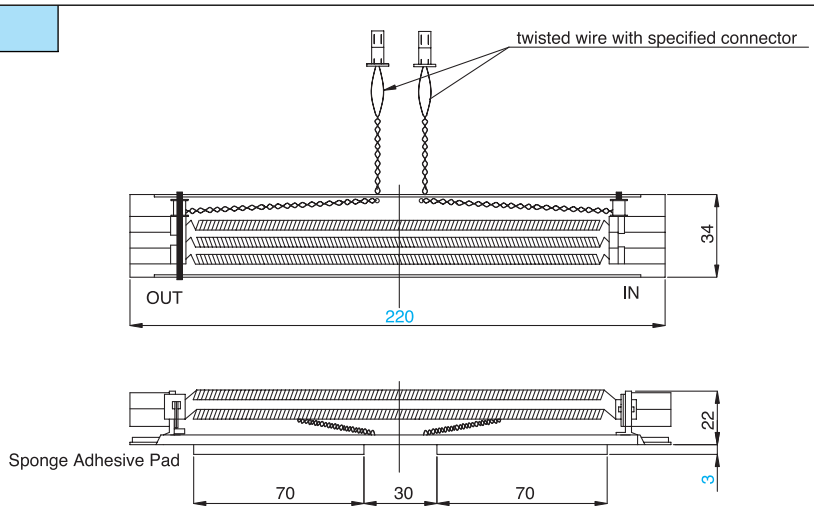

Belton Engineering Co., Ltd.

Unit 1208, Daerung Techno town 8,
481-11, Gasan-Dong,
Geumcheon-Gu, Seoul, Korea

TEL : (822)2163-0060~0065
FAX : (822)2163-0066
E-mail : belton@unitel.co.kr

ELECTRONIC REVERBERATION UNIT

(BSN SERIES) **(Small size)** CAT. NO.: BSN - 1

BSN2 series

PATENT

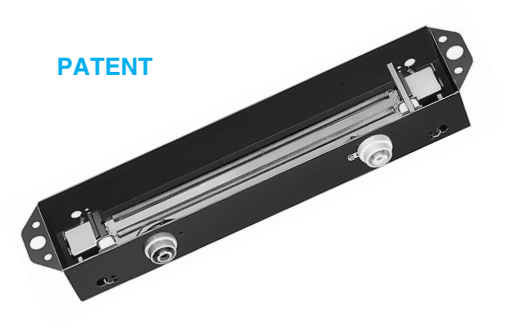

- 2 springs reverb unit
- Suited for low cost student amps and organ

BSN3 series

- 3 springs reverb with reasonable price
- Smooth and full rich reverb sound

Dimensions

BSN2AB2C1B

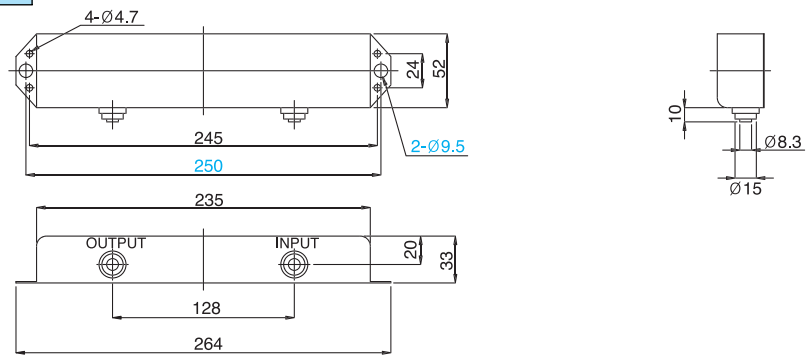

BSN3AB2C1B

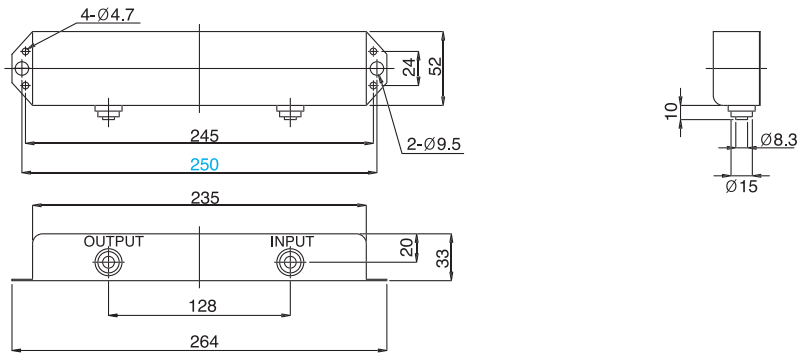

Belton Engineering Co., Ltd.

Unit 1208, Daerung Techno town 8,
481-11, Gasan-Dong,
Geumcheon-Gu, Seoul, Korea

TEL : (822)2163-0060~0065
FAX : (822)2163-0066
E-mail : belton@unitel.co.kr

ELECTRONIC REVERBERATION UNIT

(BSN WITHOUT OUTCASE SERIES) **(Small size)**

CAT. NO.: BSN - 2

REVERBERATION UNIT
ROTARY SWITCH
ENCODER SWITCH
VACUUM TUBE SOCKET & SHIELD
POWER ENTRY
JACK & XLR SOCKET

BSN2&3 with tray series

PATENT

- With special designed bottom tray, can eliminate feed back problem

BSN2&3 without tray series

PATENT

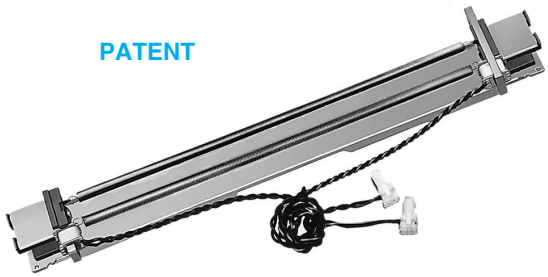

- Without outcase type
- Easy to use and save space on the P.C.B.

Dimensions

BSN2AB2ET

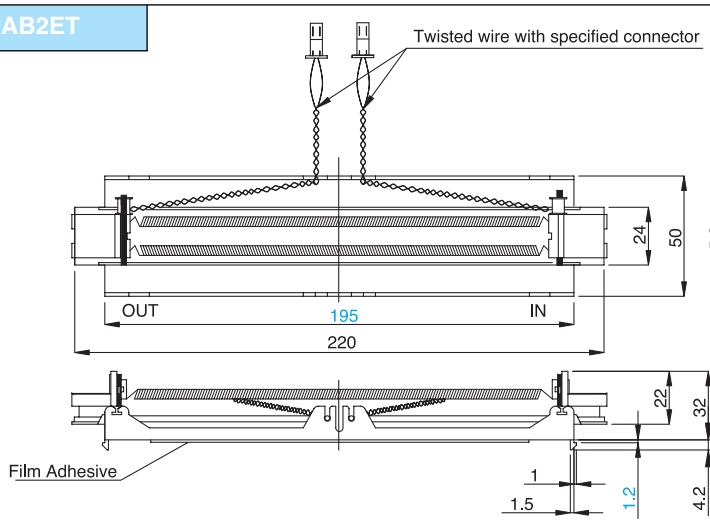

Mounting Hole

BSN2AB2E

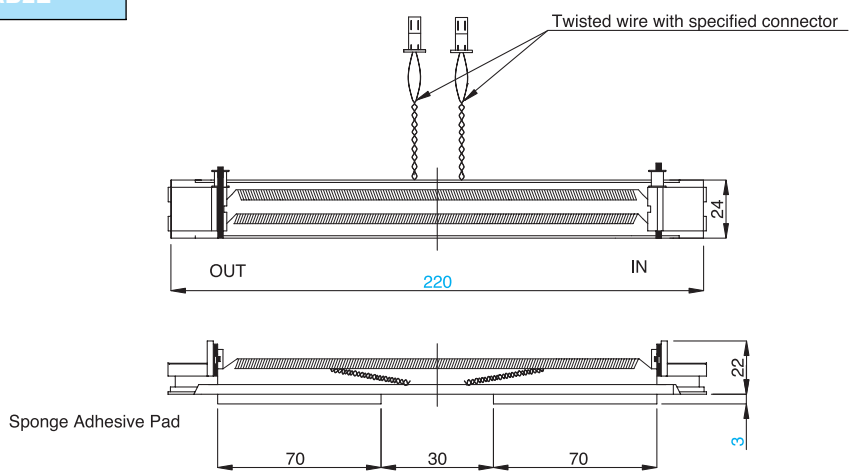

Belton Engineering Co., Ltd.

Unit 1208, Daerung Techno town 8,
481-11, Gasan-Dong,
Geumcheon-Gu, Seoul, Korea

TEL : (822)2163-0060~0065
FAX : (822)2163-0066
E-mail : belton@unitel.co.kr

ELECTRONIC REVERBERATION UNIT

(BL SERIES) **(Large size)** CAT. NO.: BL - 1

BL2 series

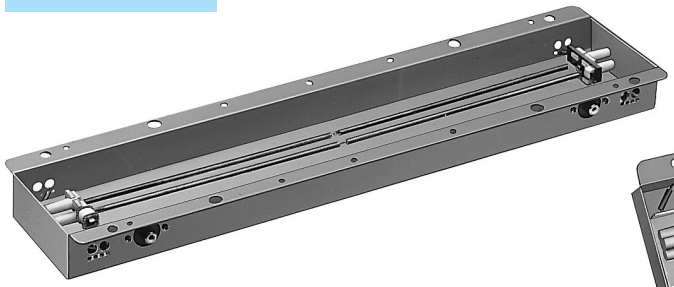

- Deep reverb effect wiht 4 springs reverb
- Smooth and rich sound reverb

BL3 series

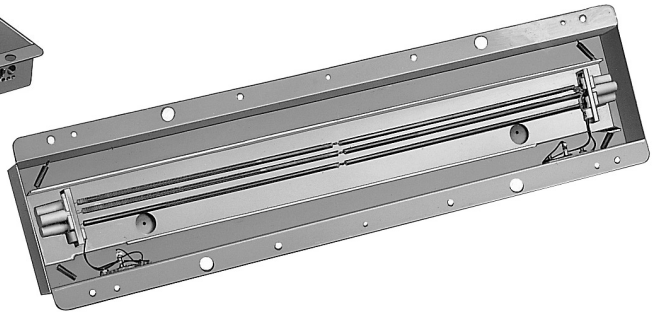

- For the studio quality reverb
- A full rich, sweet sound effect with using 6 different springs

Dimensions

BL2AB2C1B

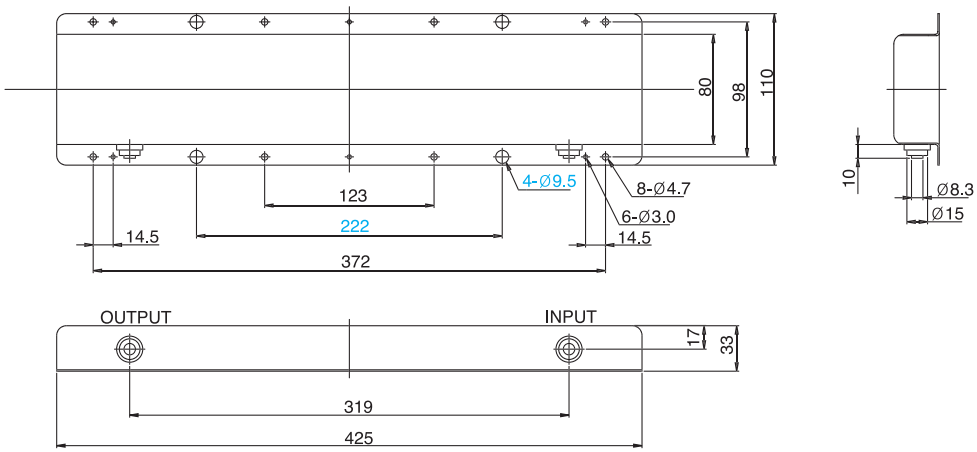

BL3AB2C1B

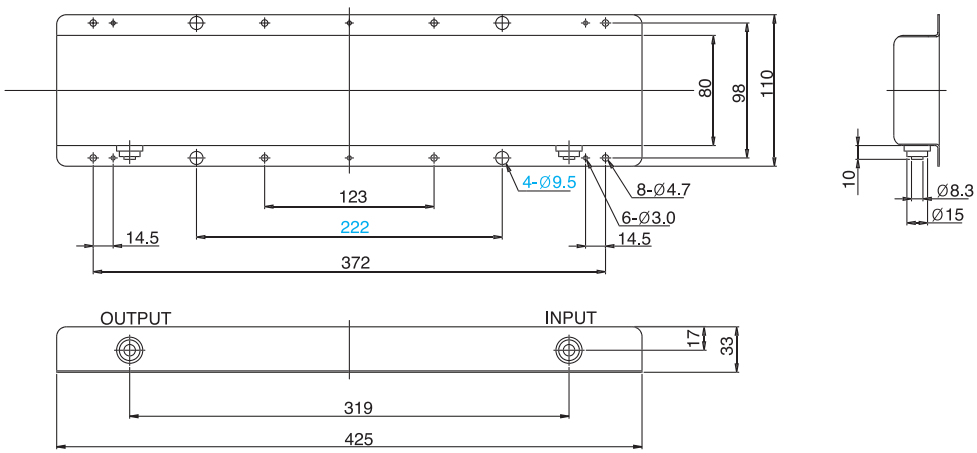

Belton Engineering Co., Ltd.

Unit 1208, Daerung Techno town 8,
481-11, Gasan-Dong,
Geumcheon-Gu, Seoul, Korea

TEL : (822)2163-0060~0065
FAX : (822)2163-0066
E-mail : belton@unitel.co.kr

ELECTRONIC REVERBERATION UNIT

(BL WITHOUT OUTCASE SERIES) **(Large size)**

CAT. NO.: BL - 2

REVERBERATION UNIT
ROTARY SWITCH
ENCODER SWITCH
VACUUM TUBE SOCKET & SHIELD
POWER ENTRY
JACK & XLR SOCKET

BL2 without outcase series

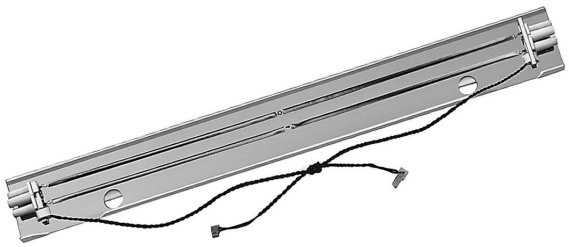

- 2 long springs reverb with 4 connected springs
- Deep and rich effect reverb sound

BL3 without outcase series

- 3 long springs reverb with 6 connected springs
- Very smooth and rich reverb effect

Dimensions

BL2AB2E

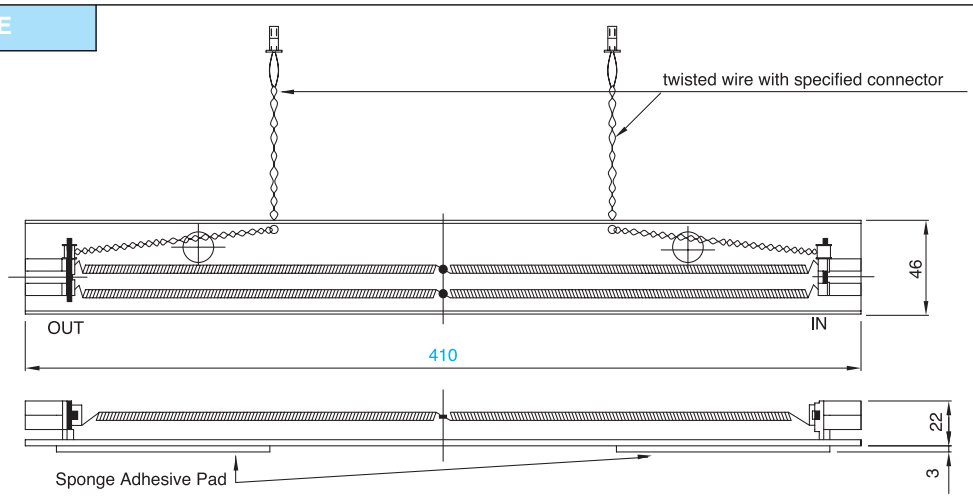

BL3AB2E

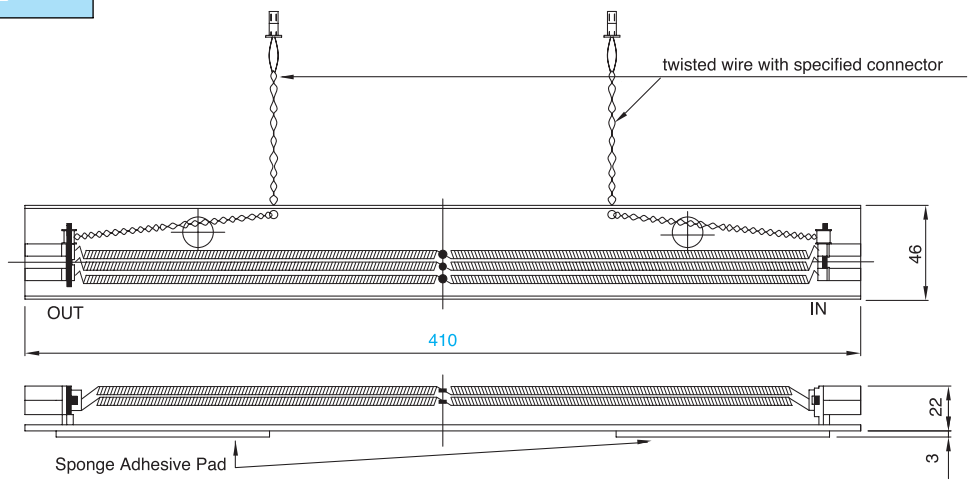

Belton Engineering Co., Ltd.

Unit 1208, Daerung Techno town 8,
481-11, Gasan-Dong,
Geumcheon-Gu, Seoul, Korea

TEL : (822)2163-0060~0065
FAX : (822)2163-0066
E-mail : belton@unitel.co.kr

One chip reverb solution that is compact, easy to use, and quite powerful

Built in DRAM eliminates the need for wide bus connections to external RAM and the choice of built in programs.

NEW

Features

- 16 internal ROM programs consisting of halls, rooms, plates, delays, chorus, flange, vocal cancel, and rotary speaker emulation.
- 32k location DRAM provides over 0.68s of delay at 48kHz sampling frequency.
- Internal crystal oscillator circuit eliminates need for discrete external passive components.
- Internal voltage regulators allow operation from 5.5V down to 3.0V V_{DD}.
- Internal 1000pF bypass capacitor to reduce voltage swings at the rails.

Applications

- Personal stereos with reverb functions
- Extremely portable guitar effects boxes
- Karaoke machines utilizing the vocal cancel program
- Hardware reverb effects for computer sound cards
- Ambience settings for car stereos

Terminal connection

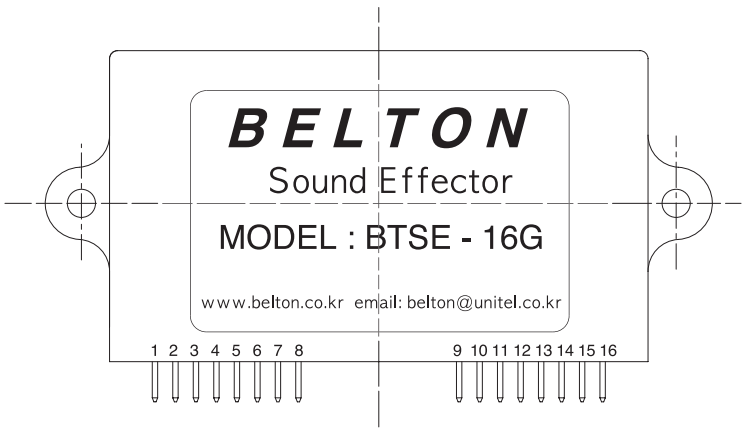

1. Left output
2. Right output
3. Analog ground
4. Input
5. N.C
6. Digital ground
7. +15V
8. -15V
9. Gray cord-3
10. Gray cord-2
11. Gray cord-1
12. Gray cord-4
13. N.C
14. N.C
15. N.C
16. +5V

Belton Engineering Co., Ltd.

Unit 1208, Daerung Techno town 8,
481-11, Gasan-Dong,
Geumcheon-Gu, Seoul, Korea

TEL : (822)2163-0060~0065
FAX : (822)2163-0066
E-mail : belton@unitel.co.kr

REVERBERATION UNIT
ROTARY SWITCH
ENCODER SWITCH
VACUUM TUBE SOCKET & SHIELD
POWER ENTRY
JACK & XLR SOCKET

Electrical Specification

- Configuration : Left and Right
- AD-DA conversion : 24Bit
- S/N ratio(A-weight) : 96dB
- Dynamic range : 107dB
- Frequency response : 20Hz-20kHz
- Max. Input voltage : 4.0Vp-p
- Input impedance : 160kohm
- Max output voltage : 4.0Vp-p
- Min Output load res : 5kohm
- Power supply : +5V, +/-15V
- Current consumption : 120mA

Mounting Type

BTSE - 16 G Horizontal mount

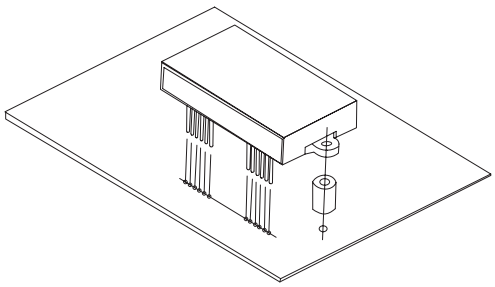

BTSE - 16 GV Vertical mount

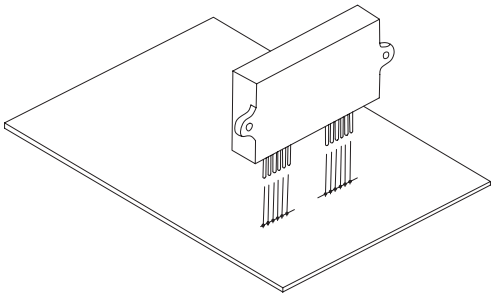

Dimensions

BTSE - 16 G

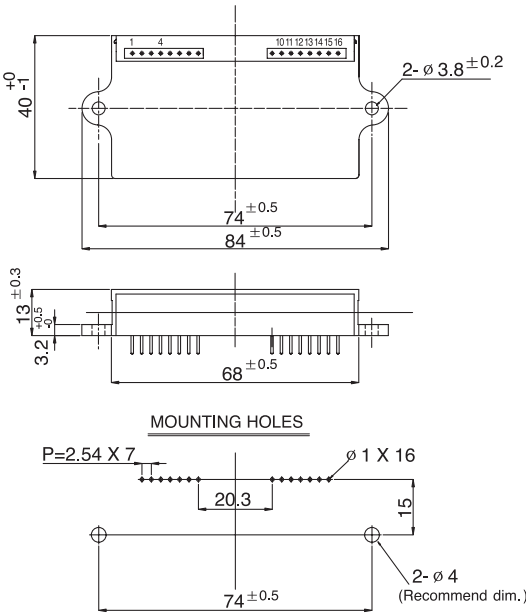

BTSE - 16 GV

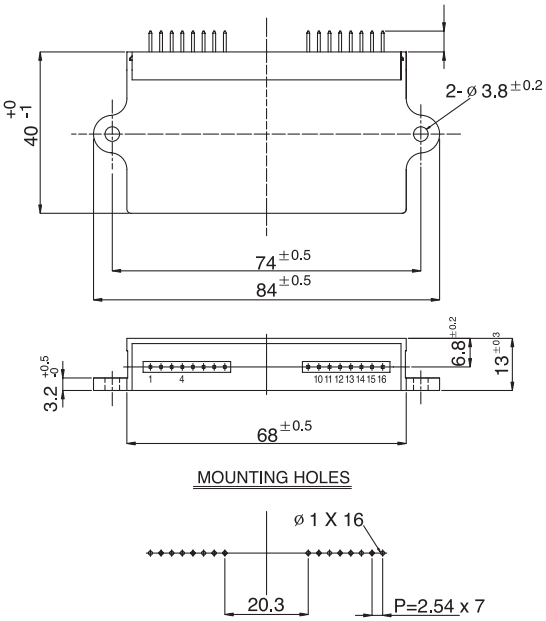

Belton Engineering Co., Ltd.

Unit 1208, Daerung Techno town 8,
481-11, Gasan-Dong,
Geumcheon-Gu, Seoul, Korea

TEL : (822)2163-0060~0065
FAX : (822)2163-0066
E-mail : belton@unitel.co.kr

Recommended Circuits

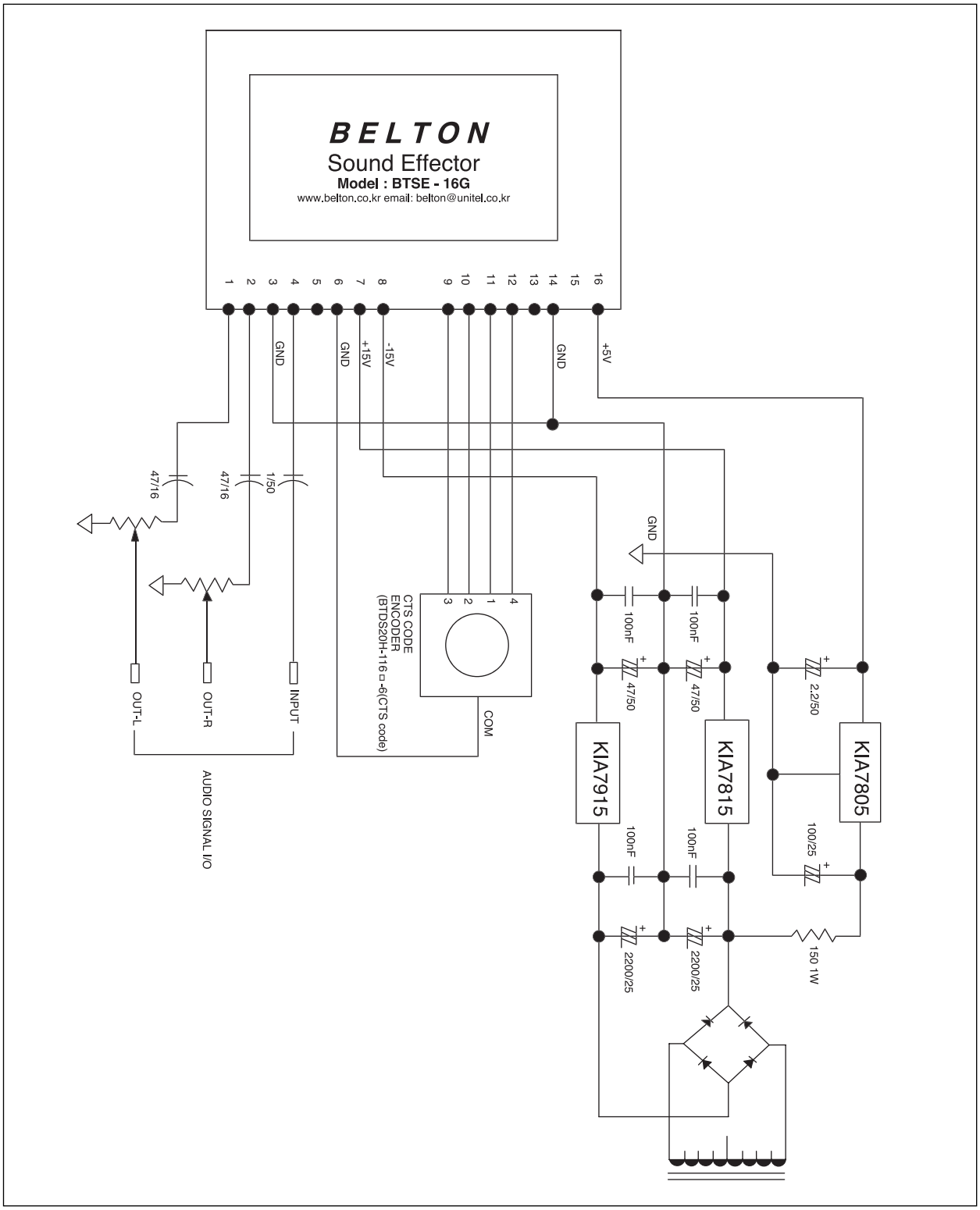

Belton Engineering Co., Ltd.

Unit 1208, Daerung Techno town 8,
481-11, Gasan-Dong,
Geumcheon-Gu, Seoul, Korea

TEL : (822)2163-0060~0065
FAX : (822)2163-0066
E-mail : belton@unitel.co.kr

Internal Programs

The BTSE-16G comes with 16 internal ROM programs ready to go, utilizing the skills and techniques of the Belton Reverb. Co. By setting the chip to internal mode, the four program pins may be used to select between the different algorithms.

• Program List

Prog	Name	Description
0110	Hall 1	Bright hall reverb for drums, guitars, and vocals.
0010	Hall 2	Warm hall for acoustic guitars, pianos, and vocals.
1010	Room 1	Hardwood studio for acoustic instruments.
1110	Room 2	Ambience for acoustic mixes and synth sounds.
1111	Room 3	Warm room for guitars and rhythm instruments.
1011	Plate 1	Classic plate reverb for lead vocals and instruments.
1001	Plate 2	Sizzling bright plate reverb for vocals and instruments.
1101	Plate 3	Short vintage plate reverb for snares and guitars.
1100	Chorus	Stereo chorus for guitars and pianos.
1000	Flange	Stereo flanger for jet wash effects.
0000	Delay 1	125ms slapback delay for vocals and guitars.
0100	Delay 2	190ms deay for percussive arpeggios.
0101	Chorus/Room 1	Chorus with reverb for guitars, synths, and pianos.
0001	Chorus/Room 2	Auto-wah guitar effect with reverb for lead instruments.
0011	Vocal Cancel	Removes lead vocals from many stereo recordings.
0111	Rotary Speaker	Rotary speaker emulation for organs and guitars.

Note :
The unusual ordering of the programs allows a 16-position rotary switch's Gray code output to be connected to the program pins.

Suggested Ordering Procedure

- To specify the Digital Sound Effector specification, please compose desired part numbers from data below and fill in the specification you desire in the following square.

Example

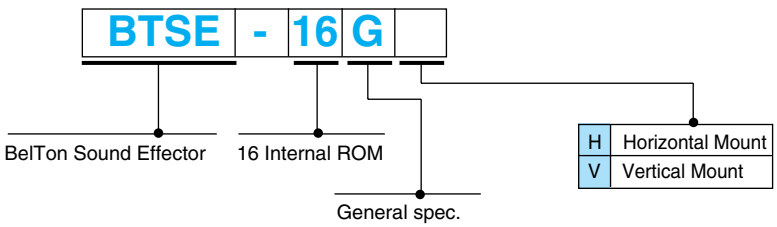

Belton Engineering Co., Ltd.

Unit 1208, Daerung Techno town 8,
481-11, Gasan-Dong,
Geumcheon-Gu, Seoul, Korea

TEL : (822)2163-0060~0065
FAX : (822)2163-0066
E-mail : belton@unitel.co.kr

Suggested Connections

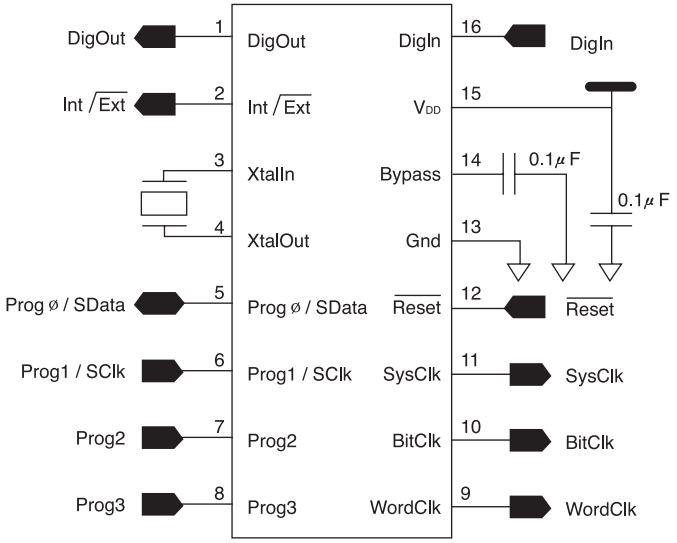

Block Diagram

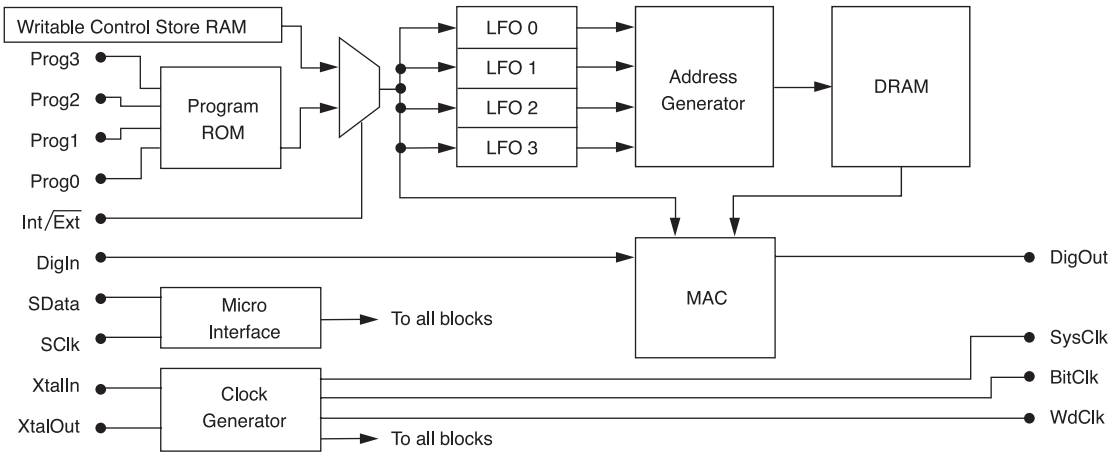

Belton Engineering Co., Ltd.

Unit 1208, Daerung Techno town 8,
481-11, Gasan-Dong,
Geumcheon-Gu, Seoul, Korea

TEL : (822)2163-0060~0065
FAX : (822)2163-0066
E-mail : belton@unitel.co.kr

REVERBERATION UNIT
ROTARY SWITCH
ENCODER SWITCH
VACUUM TUBE SOCKET & SHIELD
POWER ENTRY
JACK & XLR SOCKET

Electrical Characteristics and Operating Conditions

Parameter	Description	Condition	Min	Typ	Max	Units
Electrical Characteristics and Operating Conditions						
V_{DD}	Supply Voltage		3.0	5.0	5.5	V
I_{DD}	Supply Current : SCR		9	10	11	mA
Gnd	Ground		-	0.0	-	V
F_S	Sample rate		24	48	50	kHz
Temp	Temperature		0	25	70	℃
Output (DigOut, SysClk, BitClk, WordClk)						
V_{OH}	Logical “1” output voltage	Unloaded	0.9 V_{DD}	V_{DD}	-	V
V_{OL}	Logical “0” output voltage	Unloaded	-	0	0.05 V_{DD}	V
I_{OH}	Logical “1” output current	V_{DD}=5V VO=4.5V	-	-	-8.0	mA
I_{OL}	Logical “0” output current	V_{DD}=5V VO=0.4V	-	-	8.0	mA
Inputs (DigIn, Int/$\overline{Ext}$, Prog0/Sdata, Prog1/SCIK, Prog2, Prog3, Reset)						
V_{IH}	Logical “1” input voltage		2.5	-	V_{DD}	V
V_{IL}	Logical “0” input voltage		0	-	0.5	V
I_{IH}	Logical “1” input current	V_{DD}=V_{IH}=5V	-	-	2	μA
I_{IL}	Logical “0” input current	No pullup pin	-	-	2	μA
I_{ILP}	Logical “0” input current	Pullup pin, Vin=0	83	167	333	μA
C_{IN}	Input Capacitance		-	2.0	-	pF

Note :
1. All other voltages are relative to Gnd.
2. If V_{DD} will always be below 3.6V (including the effects of ripple, spikes, etc.) then the Bypass pin should be connected to V_{DD}.

Pin Descriptions : Internal DSP chip (* : Pull up to V_{DD} via nominal internal 30kΩ resistor)

Pin #	Name	Pin type	Description
1	Digout	Output	Digital serial output for stereo DAC.
2	Int/$\overline{Ext}$	Input*	Internal/external program selection. 1:Internal, 0:External.
3	XtalIn	Input	12.288MHz crystal input.[1]
4	XtalOut	Output	12.288MHz crystal output.[1]
5	Prog0/SData	Bidirectional*	Internal program select 0 / serial interface data line.
6	Prog1/SClk	Input*	Internal program select 1 / serial interface clock line.
7	Prog2	Input*	Internal program select 2.
8	Prog3	Input”	Internal program select 3.
9	WordClk	Output	Word clock output.
10	BitClk	Output	Bit clock output.
11	SysClk	Output	System clock output.
12	Reset	Input	Active low reset.
13	Gnd	Ground	Ground connection
14	Bypass	Bidirectional	Connect 0.1μF bypass capacitor, Gnd for internal regulator.
15	V_{DD}	Power	VDD power pin. Connect 0.1μF capacitor to Gnd.
16	DigIn	Input	Digital serial input from stereo ADC.

Note :
1. Intenal 18pF capacitor to ground. Internal 120kΩ resistor between Xtal pads.
2. If V_{DD} will always be below 3.6V (including the effects of ripple, spikes, etc.) then the Bypass pin should be connected to V_{DD}.

Belton Engineering Co., Ltd.

Unit 1208, Daerung Techno town 8,
481-11, Gasan-Dong,
Geumcheon-Gu, Seoul, Korea

TEL : (822)2163-0060~0065
FAX : (822)2163-0066
E-mail : belton@unitel.co.kr

Proposed Panel design for Sound effector

Program List	Name	Description
0110	Hall 1	Bright hall reverb for drum, guitar, and vocals.
0010	Hall 2	Warm hall for acoustic guitars, pianos and vocals.
1010	Room 1	Hardwood studio for acoustic instruments.
1110	Room 2	Ambience for acoustic mixers and synth sounds.
1111	Room 3	Warm room for guitars and rhythm.
1011	Plate 1	Classic plate reverb for lead vocals and drums.
1001	Plate 2	Sizzling bright plate reverb for vocals and guitars.
1101	Plate 3	Short vintage plate reverb for snares and guitars.
1100	Chorus	Stereo chorus for guitars and pianos.
1000	Flanger	Stereo flanger for jet wash effects.
0000	Delay 1	125ms snapback delay for vocals and guitars.
0100	Delay 2	190ms delay for percussive arpeggios.
0101	Chorus/Room 1	Chorus with reverb for guitars, synths, and pianos.
0001	Chorus/Room 2	Auto wah guitar effect with reverb for lead instruments.
0011	Vocal Cancel	Removes lead vocals from many stereo recordings.
0111	Rotary Speaker	Rotary speaker emulation for organs and guitars.

Note :
The unusual ordering of the programs allow a 16-position rotary switch's CTS code output to be connected to the program pins.

Program Mode Change for Panel

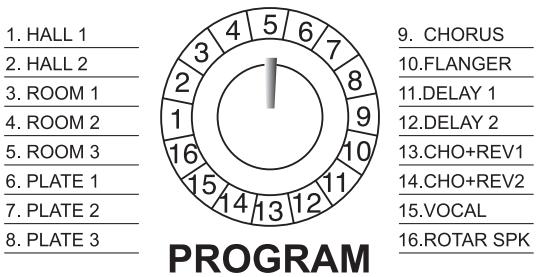

Belton Engineering Co., Ltd.

Unit 1208, Daerung Techno town 8,
481-11, Gasan-Dong,
Geumcheon-Gu, Seoul, Korea

TEL : (822)2163-0060~0065
FAX : (822)2163-0066
E-mail : belton@unitel.co.kr

ROTARY SWITCH & ROTARY DIGITAL CODE SWITCH

- 10 & 16 ∅ Switch for horizontal mounting ····21~28
- 12 & 18 ∅ Switch for vertical mounting ·····29~33
- 10 & 20 ∅ Digital code rotary switch ····· 34~39

Miniaturized rotary switch with 12 positioned max.

Features

- Designed for P.C. Board mounting version
- Miniaturized size(10mm:height × 30mm:width)
- 5mm mounting height from shaft-center to P.C.Board
- All switch contacts are plated by gold.

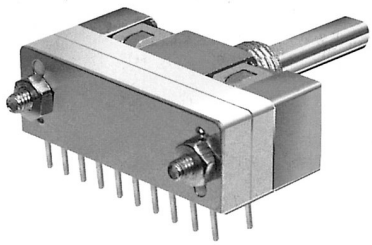

Applications

- Applicable to the wide-ranged products such as Measuring and communication equipments

Standard Dimensions

BTNR100H-□□□□-□□□□

P.C.B Mounting Hole

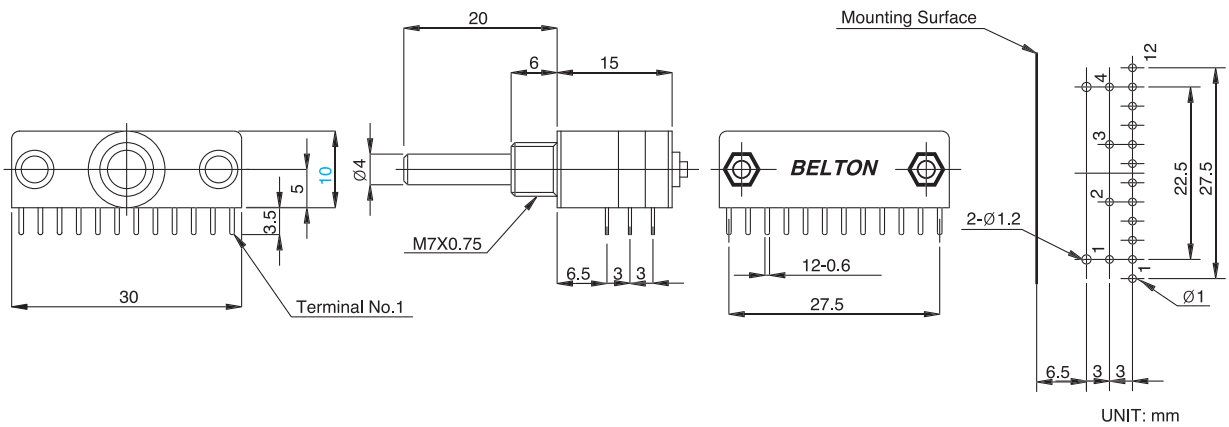

Electrical specifications

- Electrical Rating: 0.3A, 16V DC
- Contact Resistance: 50 mohms(initial)
- Insulation Resistance: 100 Mohms, 500V DC
- Withstanding Voltage: 1Min. at 500V AC
- Circuits: Refer to the next page

Mechanical specifications

- Electrical life: 10,000 cycles min
- Terminal strength: 500gf · cm for 1 min
- Solderability: 230 ± 5°C, 3 sec
- Contact timing: shorting and non-shorting
- Rotational torque: 500 ± 100gf.cm
  Changeover angle: 30° ± 0.5°

Belton Engineering Co., Ltd.

Unit 1208, Daerung Techno town 8,
481-11, Gasan-Dong,
Geumcheon-Gu, Seoul, Korea

TEL : (822)2163-0060~0065
FAX : (822)2163-0066
E-mail : belton@unitel.co.kr

REVERBERATION UNIT
ROTARY SWITCH
ENCODER SWITCH
VACUUM TUBE SOCKET & SHIELD
POWER ENTRY
JACK & XLR SOCKET

Circuit Diagrams

- Terminal position

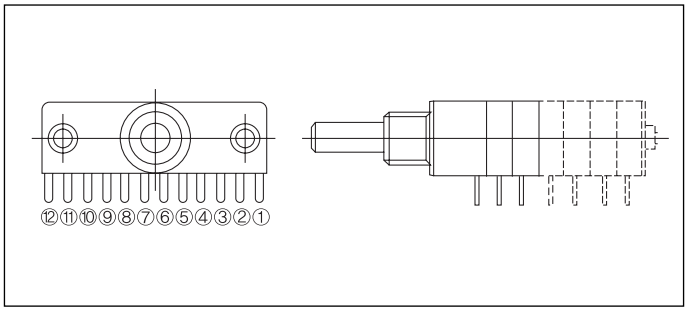

- P.C.B Mounting Hole

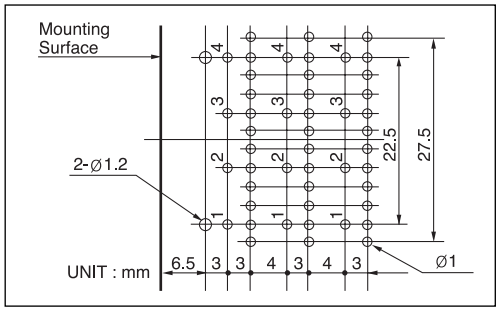

- Circuit diagram per section

1 Pole 12 Throws (1P 12T)	2 Poles 6 Throws (2P 6T)	3 Poles 4 Throws (3P 4T)	4Poles 3 Throws (4P 3T)
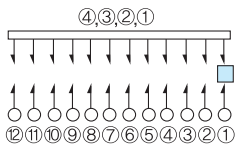	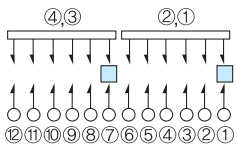	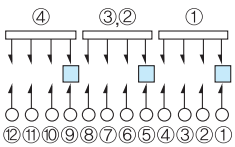	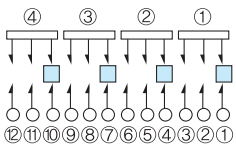

Suggested Ordering Code

BTNR100H	-	1	1	2	N	-	6	R	2	0

Series

Number of wafer sections

Number of sections	1-6
Code	1-6

Number of positions

Number of positions	02-12
Code	02-12

Changeover timing

Changeover timing	Shorting	Non-shorting
Code	S	N

Shaft length

Shaft length	15	20	25	30	35	40
Code	15	20	25	30	35	40

Shaft style(6mm dia)

Shaft style	18-tooth serration shaft	Round shaft with groove	Flat shaft
Code	6S	6R	6F

Shaft style(4mm dia)

Shaft style	Double side flat	Round shaft with groove	Flat shaft
Code	4H	4R	4F

Belton Engineering Co., Ltd.

Unit 1208, Daerung Techno town 8,
481-11, Gasan-Dong,
Geumcheon-Gu, Seoul, Korea

TEL : (822)2163-0060~0065
FAX : (822)2163-0066
E-mail : belton@unitel.co.kr

Miniaturized rotary switch with multi-functions

Features

- Designed for P.C. Board mounting version
- Miniaturized size(12mm:height × 10mm:width)
- 6.5mm mounting height from shaft-center to P.C.Board

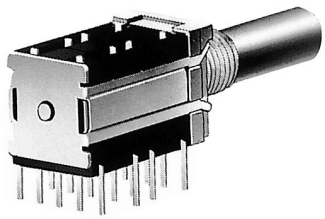

Applications

- Applicable to the wide-ranged products such as car-audio, transceiver and communication equipments

Standard Dimensions

BTSR10H-□□□-□□□

P.C.B Mounting Hole

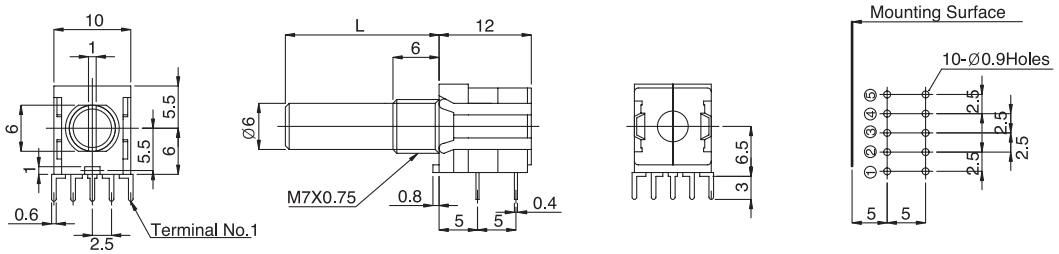

Electrical specifications

- Electrical Rating: 0.1A, 16V DC
- Contact Resistance: 50 mohms(initial)
- Insulation Resistance: 100 Mohms, 500V DC
- Withstanding Voltage: 1Min. at 500V AC
- Circuits: Refer to the next page

Mechanical specifications

- Electrical life: 10,000 cycles min
- Terminal strength: 500gf · cm for 1 min
- Solderability: 230 ± 5°C, 3 sec
- Contact timing: shorting and non-shorting
- Rotational torques : 500 ± 200gf · cm

Belton Engineering Co., Ltd.

Unit 1208, Daerung Techno town 8,
481-11, Gasan-Dong,
Geumcheon-Gu, Seoul, Korea

TEL : (822)2163-0060~0065
FAX : (822)2163-0066
E-mail : belton@unitel.co.kr

REVERBERATION UNIT
ROTARY SWITCH
ENCODER SWITCH
VACUUM TUBE SOCKET & SHIELD
POWER ENTRY
JACK & XLR SOCKET

Circuit Diagram

- Rotary switch

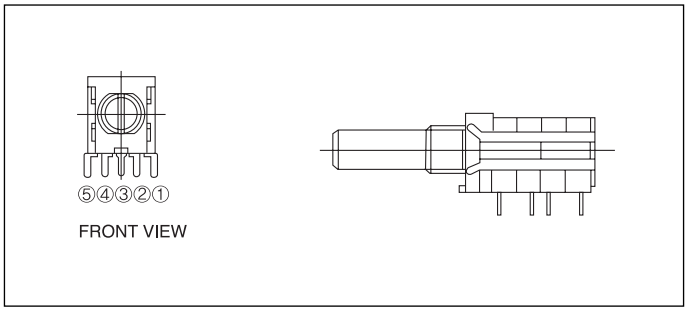

1) Circuit diagram

1~4 Positions		5 Positions		6 Positions	
Front	Rear	Front	Rear	Front	Rear
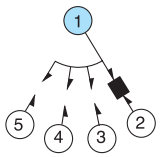	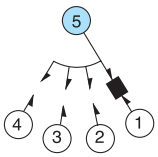	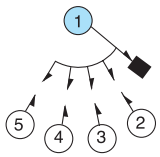	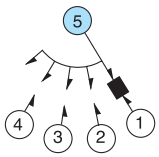	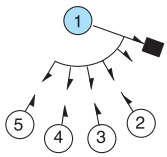	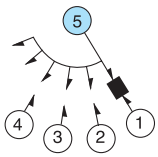

2) Changeover angle: 30° ± 3° (2~6 positions)

Suggested Ordering Code

BTSR10H	-	1	5	N	-	R	2	0

Series

Number of wafer sections

Number of sections	1-3
Code	1-3

Number of positions

Number of positions	2-6
Code	2-6

Shaft length

Shaft length	15	20	25	30	35	40
Code	15	20	25	30	35	40

Shaft style

Shaft style	18-tooth serration shaft	Round shaft with groove	Flat shaft
Code	S	R	F

Changeover timing

Changeover timing	Shorting	Non-shorting
Code	S	N

Belton Engineering Co., Ltd.

Unit 1208, Daerung Techno town 8,
481-11, Gasan-Dong,
Geumcheon-Gu, Seoul, Korea

TEL : (822)2163-0060~0065
FAX : (822)2163-0066
E-mail : belton@unitel.co.kr

Typical Dimensions

Type	No. of section	Dimension	P.C.Board mounting
Single shaft	1 section rotary switch	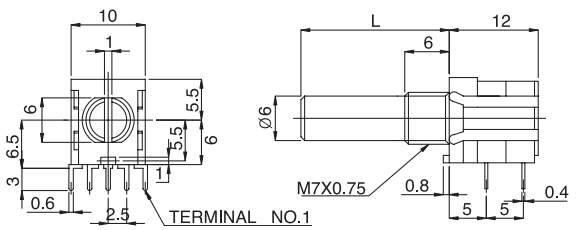	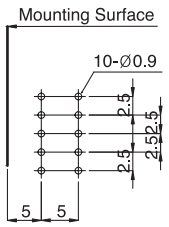
	2 & 3 sections rotary switch	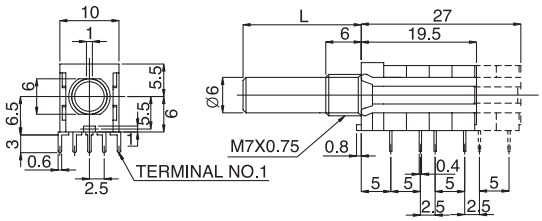	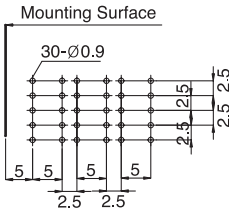
	1 section pulse switch	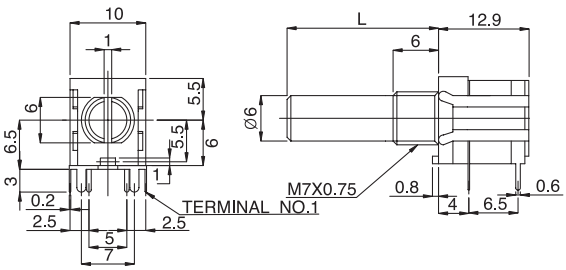	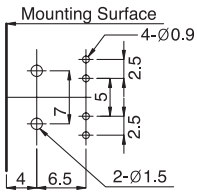
Dual shaft	rotary + rotary switch combination	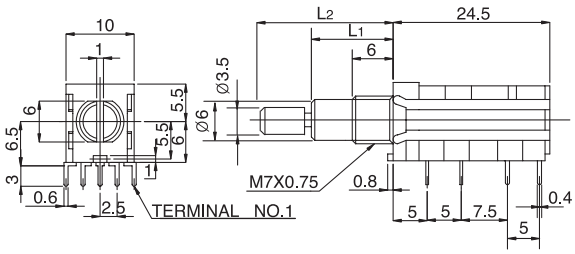	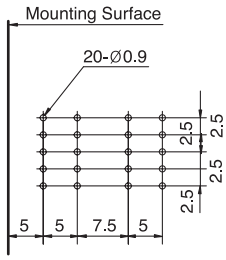

Belton Engineering Co., Ltd.

Unit 1208, Daerung Techno town 8,
481-11, Gasan-Dong,
Geumcheon-Gu, Seoul, Korea

TEL : (822)2163-0060~0065
FAX : (822)2163-0066
E-mail : belton@unitel.co.kr

REVERBERATION UNIT
ROTARY SWITCH
ENCODER SWITCH
VACUUM TUBE SOCKET & SHIELD
POWER ENTRY
JACK & XLR SOCKET

General purpose rotary switch with compact ganged design

Features

- Designed for general purpose electric and electronic equipments
- P.C.Board mounting type and compact size (21mm:height × 16.2mm:width)
- 12.5mm height from shaft center to P.C.Board

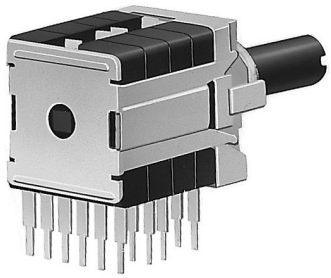

Applications

- For all kinds of electric and electronic equipments, specially for measuring instruments and radio equipments

Standard Dimensions

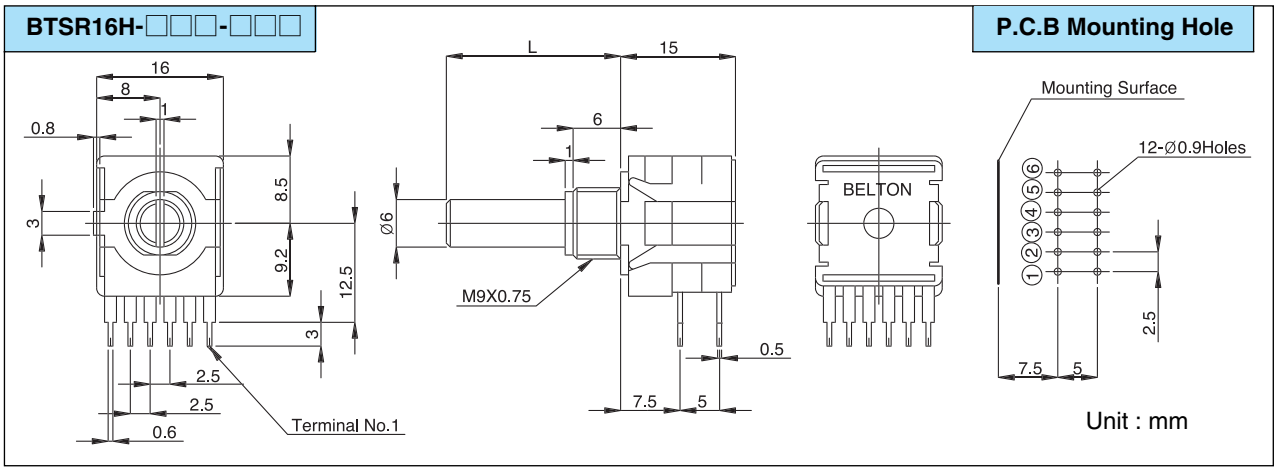

Product Classifications

Shaft structure \ Product		Rotary switch	Pulse switch
Single shaft		○	○
Dual shaft	1 section rotary switch with out-shaft	○	—
	2 sections rotary switch with out-shaft	○	—
	3 sections rotary switch with out-shaft	○	—

Electrical specifications

- Electrical Rating: 0.3A, 16V DC
- Contact Resistance: 50 mohms(initial)
- Insulation Resistance: 100 Mohms, 500V DC
- Withstanding Voltage: 1min. at 500V AC
- Circuits: Refer to the next page

Mechanical specifications

- Electrical life: 10,000 cycles min
- Terminal strength: 500gf · cm for 1 min
- Solderability: 230 ± 5°C, 3 sec
- Contact timing: shorting and non-shorting
- Changeover angle: 30 ± 3° (2~6 positions)

Rotational Torques

- Single shaft: 700 ± 300gf · cm
- Dual shaft: 700 ± 300gf · cm
- Rotational torque can be changeable by option

Belton Engineering Co., Ltd.

Unit 1208, Daerung Techno town 8,
481-11, Gasan-Dong,
Geumcheon-Gu, Seoul, Korea

TEL : (822)2163-0060~0065
FAX : (822)2163-0066
E-mail : belton@unitel.co.kr

ROTARY SWITCH

(BTSR16H SERIES)

CAT. NO.: BTSR16H-2

Circuit Diagram

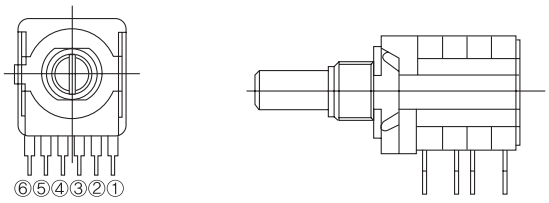

1~5 Positions		6 Positions	
Front	Rear	Front	Rear
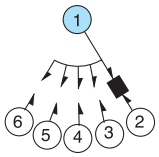	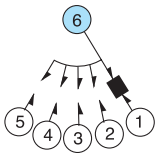	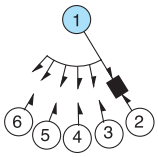	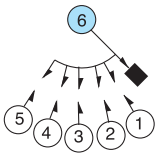

Suggested ordering code

BTSR16H	-	1	5	N	-	R	2	0

Series

Number of wafer sections

Number of sections	1-3
Code	1-3

Number of positions

Number of positions	2-6
Code	2-6

Changeover timing

Changeover timing	Shorting	Non-shorting
Code	S	N

Shaft length

Shaft length	15	20	25	30	35	40
Code	15	20	25	30	35	40

Shaft style

Shaft style	18-tooth serration shaft	Round shaft with groove	Flat shaft
Code	S	R	F

Belton Engineering Co., Ltd.

Unit 1208, Daerung Techno town 8,
481-11, Gasan-Dong,
Geumcheon-Gu, Seoul, Korea

TEL : (822)2163-0060~0065
FAX : (822)2163-0066
E-mail : belton@unitel.co.kr

REVERBERATION UNIT
ROTARY SWITCH
ENCODER SWITCH
VACUUM TUBE SOCKET & SHIELD
POWER ENTRY
JACK & XLR SOCKET

Typical Dimensions

Type	No. of section	Dimension	P.C.Board mounting
Single shaft	1 section rotary switch	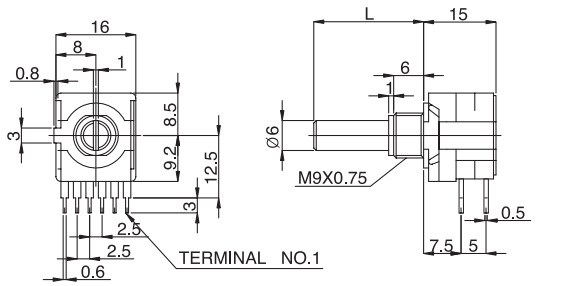	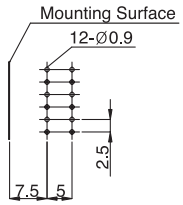
	2 sections rotary switch	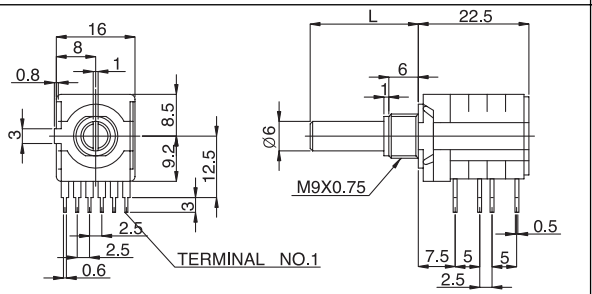	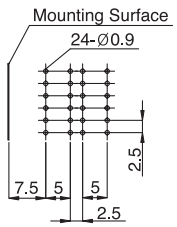
	3 sections rotary switch	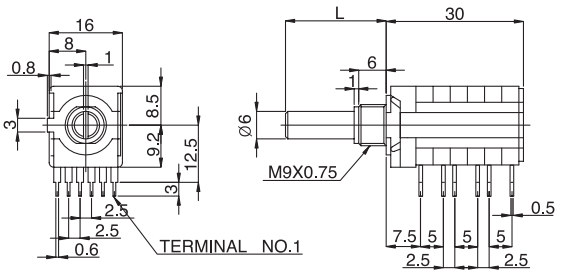	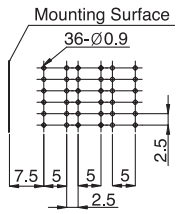
Dual shaft	1 to 3 sections rotary switch	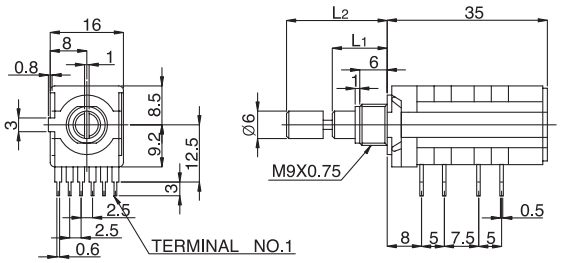	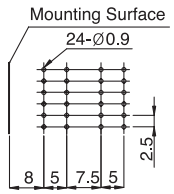

Belton Engineering Co., Ltd.

Unit 1208, Daerung Techno town 8,
481-11, Gasan-Dong,
Geumcheon-Gu, Seoul, Korea

TEL : (822)2163-0060~0065
FAX : (822)2163-0066
E-mail : belton@unitel.co.kr

Simplest switch function with low-profile vertical mounting & available reflow solderable type

NEW

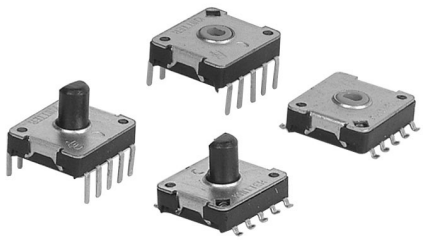

Features

- 4mm height low-profile vertical switch
- Miniaturized size(13mm × 12.4mm:width × 4mm:height)
- Reflow solderable type available

Applications

- Signal selector for all kinds of electronic equipments and multi-signal source selector

Standard Dimensions

BTSR12VN-09

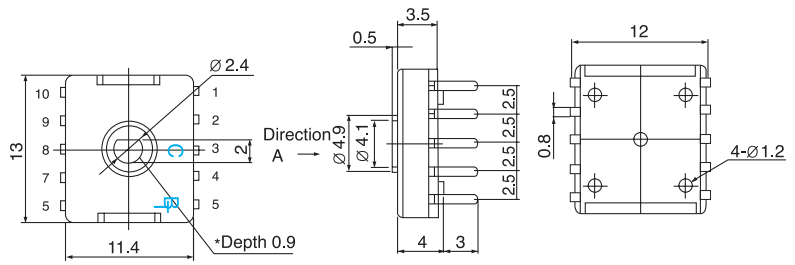

Circuit Diagrams

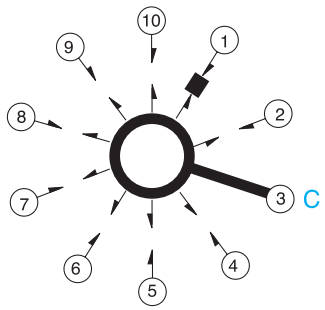

Electrical specifications

- Electrical Rating: 0.1A, 16V DC
- Contact Resistance: 50 mohms(initial)
- Insulation Resistance: 100 Mohms at 100V DC
- Withstanding Voltage: 1Min. at 100V AC
- Circuits: Refer to the next page

Mechanical specifications

- Electrical life: 10,000 cycles min
- Changeover angle: 40°
- No. of position: 9(endless)
- No. of pole: 1
- Contact timing: non-shorting
- Solderability: 230 ± 5°C, 3sec
- Terminal shape: P.C.Board type only
- Shaft shape: Flat type
- Operating force : 100 ± 50 gf · cm

Belton Engineering Co., Ltd.

Unit 1208, Daerung Techno town 8,
481-11, Gasan-Dong,
Geumcheon-Gu, Seoul, Korea

TEL : (822)2163-0060~0065
FAX : (822)2163-0066
E-mail : belton@unitel.co.kr

ROTARY SWITCH

(BTSR12V SERIES)

CAT. NO.: BTSR12V-2

BTSR12VT-09

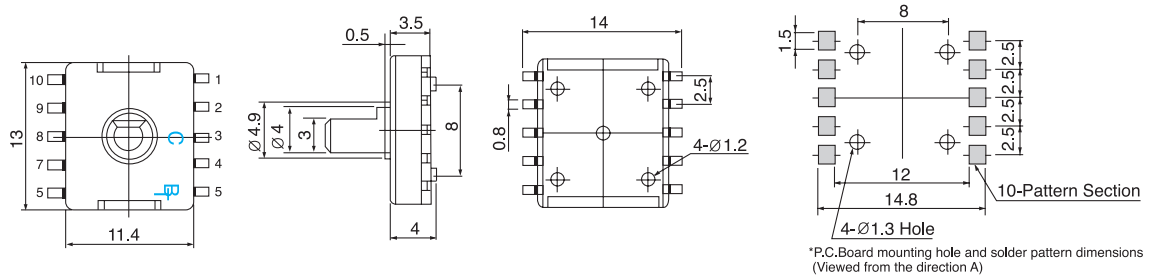

P.C.B Pattern

BTSR12VS-09

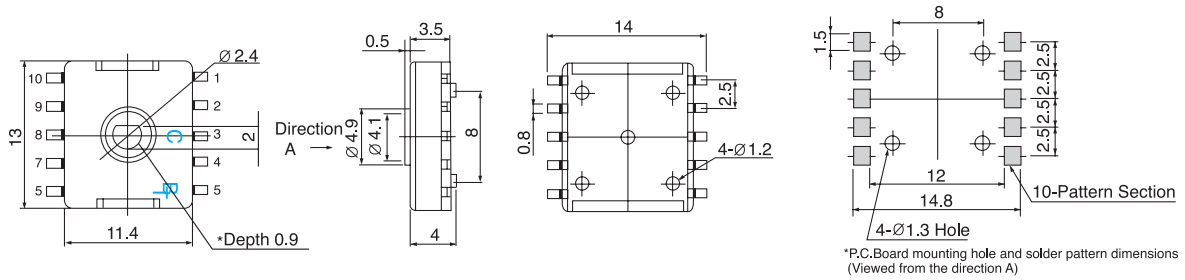

P.C.B Pattern

Suggested ordering code

BTSR12V	-	0	9

Series

Number of positions

Number of positions	9	5
Code	9	5

Construction

Construction	1~3
Code	0

Belton Engineering Co., Ltd.
Unit 1208, Daerung Techno town 8,
481-11, Gasan-Dong,
Geumcheon-Gu, Seoul, Korea
TEL : (822)2163-0060~0065
FAX : (822)2163-0066
E-mail : belton@unitel.co.kr

Low-profile vertical rotary switch with compact design

Features

- Low-profile one section vertical mounting structure
- Compact size(17mm × 18.7mm: width × 7.5mm: height)
- Changeable plastic shaft length

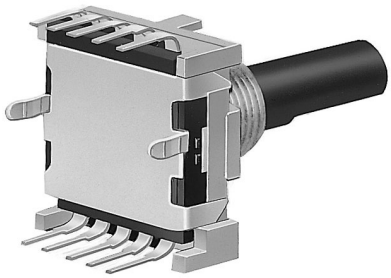

Applications

- For all kinds of electronic equipments such as audio amplifier, tuner and radio communication equipments

Standard Dimensions

BTSR18V-□□□-□□□-□

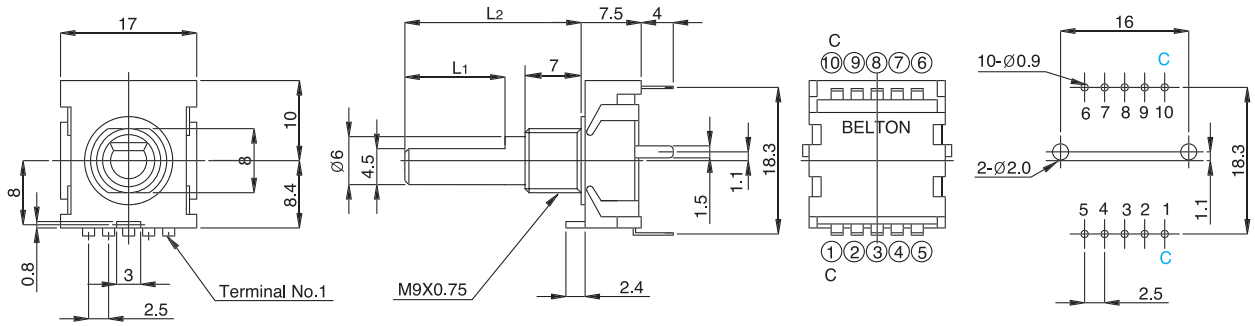

P.C.B Mounting Hole

Unit : mm

Electrical specifications

- Electrical Rating: 0.3A, 16V DC
- Contact Resistance: 50 mohms(initial)
- Insulation Resistance: 100 Mohms at 500V DC
- Withstanding Voltage: 1Min. at 100V AC
- Circuits: Refer to the next page

Mechanical specifications

- Electrical life: 10,000 cycles min
- Changeover angle: 30°
- No. of position: 2~8(1pole)
  2~4(2poles)
- Contact timing: non-shorting
- Shaft lenght: 15, 20, 25mm
- Rotational torque: 600 ± 300 gf · cm
- Solderability: 230 ± 5°C, 3sec
- Terminal shape: P.C.Board type only
- No. of section: 1 section

Belton Engineering Co., Ltd.

Unit 1208, Daerung Techno town 8,
481-11, Gasan-Dong,
Geumcheon-Gu, Seoul, Korea

TEL : (822)2163-0060~0065
FAX : (822)2163-0066
E-mail : belton@unitel.co.kr

REVERBERATION UNIT
ROTARY SWITCH
ENCODER SWITCH
VACUUM TUBE SOCKET & SHIELD
POWER ENTRY
JACK & XLR SOCKET

Circuit Diagrams

Number of poles	1 pole	2 poles
Circuit diagram	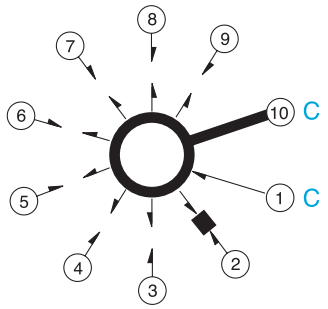	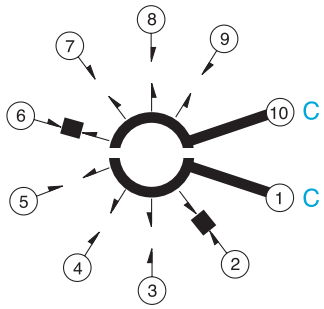

Suggested ordering code

BTSR18V	-	1	5	N	-	F	2	5	-	1

Series

Number of poles

Number of poles	1	2
Code	1	2

Number of positions

Number of positions	2~8
Code	2~8

Material of shaft

Material of shaft	Mold shaft	Metal shaft
Code	1	2

Shaft length

Shaft length	15	20	25
Code	15	20	25

Shaft style

Shaft style	Flat shaft	18Serration
Code	F	S

Belton Engineering Co., Ltd.

Unit 1208, Daerung Techno town 8,
481-11, Gasan-Dong,
Geumcheon-Gu, Seoul, Korea

TEL : (822)2163-0060~0065
FAX : (822)2163-0066
E-mail : belton@unitel.co.kr

Summerized general specifications of Rotary Switches

Electrical specifications

No.	Typical Series	Electrical Rating	Contact Resistance	Insulation Resistance	Withstanding Voltage
1	BTNR 100	0.1A, 12V DC	100 mohms max.	100 Mohms at 500V DC	500V AC for 1 min.
2	BTSR 10H	0.1A, 16V DC	50 mohms max.	100 Mohms at 500V DC	500V AC for 1 min.
3	BTSR 16H	0.3A, 16V DC	50 mohms max.	100 Mohms at 500V DC	500V AC for 1 min.
4	BTSR 12V	0.1A, 16V DC	50 mohms max.	100 Mohms at 100V DC	100V AC for 1 min.
5	BTSR 18V	0.3A, 16V DC	50 mohms max.	100 Mohms at 500V DC	500V AC for 1 min.

Mechanical specifications

No.	Typical Series	Rotational Torgue	Operating Life	Others
1	BTNR 100	1,000 ±500 gf·cm	10,000 cycles min.	∗Operating Temp. range: -10~+60°C ∗Cold proof Temp. range: -20±2°C for 96 hr ∗Hot proof Temp. range: +85±2°C for 96hr ∗Solderability: 230±5°C, 3±0.5 sec ∗Solder heat resistance: 260±5°C, 5 sec
2	BTSR 10H	500 ±200 gf·cm	10,000 cycles min.	
3	BTSR 16H	500 ±200 gf·cm	10,000 cycles min.	
4	BTSR 12V	100 ±50 gf·cm	10,000 cycles min.	
5	BTSR 18V	600 ±300 gf·cm	10,000 cycles min.	

Belton Engineering Co., Ltd.

Unit 1208, Daerung Techno town 8,
481-11, Gasan-Dong,
Geumcheon-Gu, Seoul, Korea

TEL : (822)2163-0060~0065
FAX : (822)2163-0066
E-mail : belton@unitel.co.kr

REVERBERATION UNIT
ROTARY SWITCH
ENCODER SWITCH
VACUUM TUBE SOCKET & SHIELD
POWER ENTRY
JACK & XLR SOCKET

Rotary type digital switch with compact size and gold plated contacts specially for the communication equipments.

Features

- Small and compact size(10 ∗11.5mm)
- Detent number from 4 to 16 are available.
- Capable for horizontal and vertical mounting.
- All contact points and terminals are plated by gold plating.

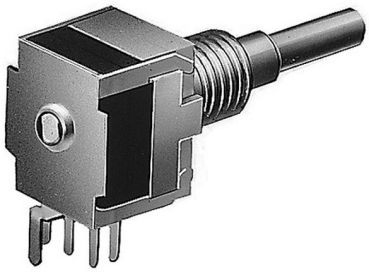

Applications

- Suitable for the channel selector and program switches at the C.B transceiver and the communication equipments.

Standard Dimensions

BTDS10HS-□□□-□□□-□

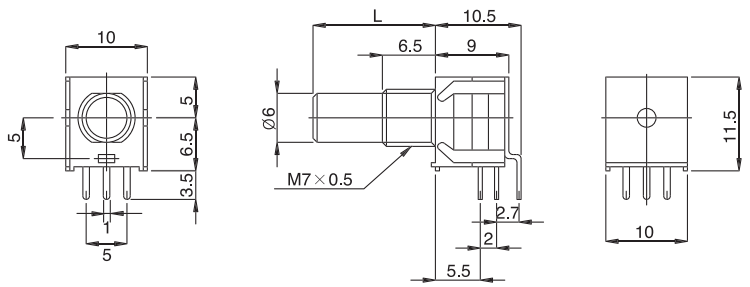

P.C.B Mounting Hole

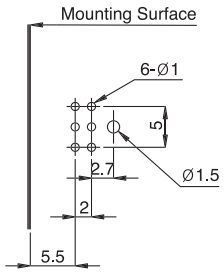

Product Classifications

NO.OF POSITIONS	4	6	8	9	10	16
ANGLE OF CHANGEOVER	20°					
NO.OF WAFER	1-3					
CODE	BINARY, BCD, GRAY, LED					
SHAFT SHAPE	ROUND AND FLATE					

Mechanical specifications

- Electrical life: 10,000 cycles min
- Terminal strength: 250 gf · cm for 1 min
- Solderability: 230 ± 5°C, 3 sec
- Changeover angle: Refer to the Product Classification table

Electrical specifications

- Electrical Rating: 0.1A, 16V DC
- Contact Resistance: 1 mohms(max)
- Insulation Resistance: 100 Mohms, 250V DC
- Withstanding Voltage: 1Min. at 250V AC
- Circuits: Refer to the next page

Rotational Torques

- Single shaft: 400 ± 100 gf · cm
- Rotational torque can be changeable by option

Belton Engineering Co., Ltd.

Unit 1208, Daerung Techno town 8,
481-11, Gasan-Dong,
Geumcheon-Gu, Seoul, Korea

TEL : (822)2163-0060~0065
FAX : (822)2163-0066
E-mail : belton@unitel.co.kr

ROTARY SWITCH

(BTDS10 SERIES) **(DIGITAL SWITCHES)** CAT. NO.: BTDS10-2

Suggested ordering code

BTDS10	H	S	-	1	1	6	-	R	2	0	-	* 1

Series

Number of wafer

Number of sections	1section	2sections	3sections
Code	1	2	3

Number of Stopper

Number of Stopper or positions	8	10	16
Code	08	10	16

Shaft length

Shaft length	15	20	25	30	ORDER
Code	15	20	25	30	DIM

Shaft style

Shaft style	Round shaft with groove	Flat shaft.
Code	R	F

* Output code

Output code	Binary(Positive)	Gray
Code	1	5

Typical Dimensions

No.of section	Dimension	P.C.Board mounting
1 section rotary switch (BTDS 10HO)	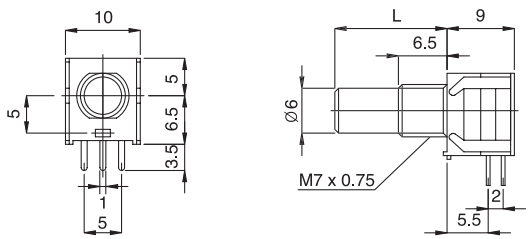	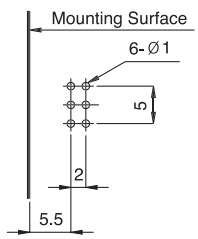
1 section rotary switch (BTDS 10HM)	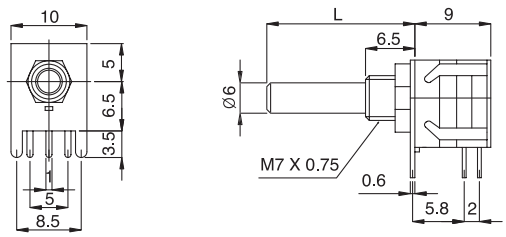	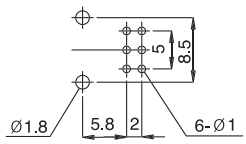
2-3 section rotary switch (BTDS 10HS-200)	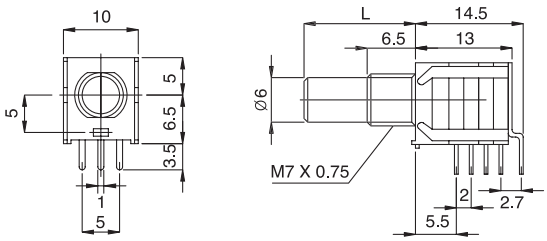	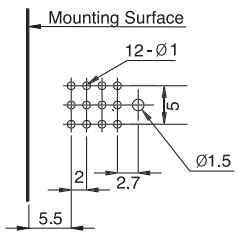
Vertical (Verical type) (BTDS 10V)	Will be produced soon.	

Belton Engineering Co., Ltd.
Unit 1208, Daerung Techno town 8,
481-11, Gasan-Dong,
Geumcheon-Gu, Seoul, Korea
TEL : (822)2163-0060~0065
FAX : (822)2163-0066
E-mail : belton@unitel.co.kr

REVERBERATION UNIT
ROTARY SWITCH
ENCODER SWITCH
VACUUM TUBE SOCKET & SHIELD
POWER ENTRY
JACK & XLR SOCKET

Rotary type digital switch with small and compact size

Features

- Small and compact size(20 * 20.5mm)
- Detent number from 8 to 40 are available
- Capable for horizontal and vertical mounting

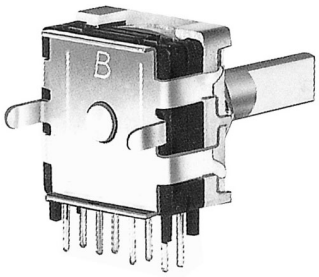

Applications

- For all kinds of digital program switches and C.B transceiver

Standard Dimensions

BTDS20H-□□□□-□□□□

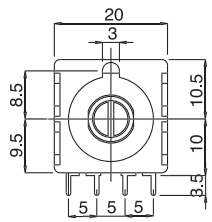

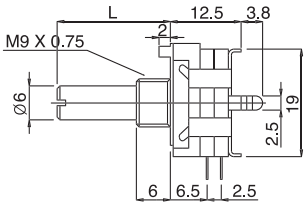

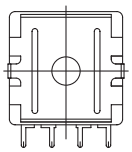

BRACKET HOLE

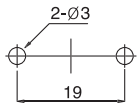

P.C.B Mounting Hole

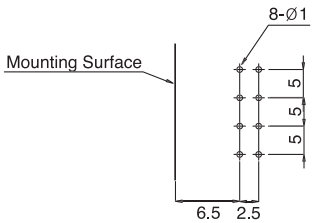

Product Classifications

NO.OF POSITIONS	8	10	16	18	24	32	40
ANGLE OF CHANGEOVER	45°	36°	22.5°	20°	15°	11.25°	9°
BITS PER STEP	7						
NO.OF WAFER	1-3						
CODE	BINARY, BCD, GRAY, LED						
SHAFT SHAPE	18 SERRATION, R AND FLATE						

Electrical specifications

- Electrical Rating: 0.1A, 15V DC
- Contact Resistance: 1 mohms(max)
- Insulation Resistance: 100 Mohms, 500V DC
- Withstanding Voltage: 1Min. at 500V AC
- Circuits: Refer to the next page

Mechanical specifications

- Electrical life: 10,000 cycles min
- Terminal strength: 250kgf · cm for 1 min
- Solderability: 230 ± 5°C, 3 sec
- Changeover angle: Refer to the Product Classification table

Rotational Torques

- Single shaft: 700 ± 300gf · cm
- Dual shaft: 700 ± 300gf · cm
- Rotational torque can be changeable by option

Belton Engineering Co., Ltd.

Unit 1208, Daerung Techno town 8,
481-11, Gasan-Dong,
Geumcheon-Gu, Seoul, Korea

TEL : (822)2163-0060~0065
FAX : (822)2163-0066
E-mail : belton@unitel.co.kr

Rotary type digital code switch for vertical mount

Features

- Clear detent operation with perfect contact
- 8 to 40 detent codes are avaiable
- Suitable design for guitar amp, and audio mixer

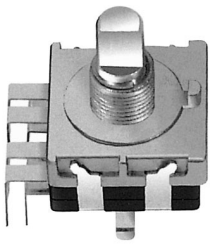

Applications

- For all kinds of digital program switches and C.B transceiver

Standard Dimensions

BTDS20VS-□□□□-□□□□

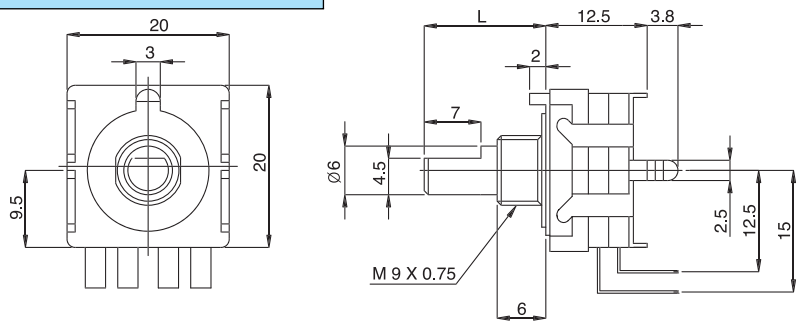

BRACKET HOLE

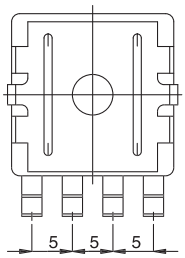

P.C.B Mounting Hole

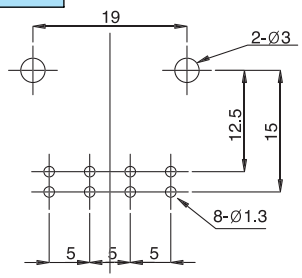

Product Classifications

NO.OF POSITIONS	8	10	16	18	24	32	40
ANGLE OF CHANGEOVER	45°	36°	22.5°	20°	15°	11.25°	9°
BITS PER STEP	7						
NO.OF WAFER	1-3						
CODE	BINARY, BCD, GRAY, LED						
SHAFT SHAPE	18SERRATION, R AND FLATE						

Electrical specifications

- Electrical Rating: 0.1A, 16V DC
- Contact Resistance: 1 mohms(max)
- Insulation Resistance: 100 Mohms, 500V DC
- Withstanding Voltage: 1Min. at 500V AC
- Circuitsl: Refer to the next page

Mechanical specifications

- Electrical life: 10,000 cycles min
- Terminal strength: 250gf · cm for 1 min
- Solderability: 230 ± 5°C, 3 sec
- Changeover angle: Refer to the Product Classification table

Rotational Torques

- Single shaft: 700 ± 300gf · cm
- Dual shaft: 700 ± 300gf · cm
- Rotational torque can be changeable by option

Belton Engineering Co., Ltd.

Unit 1208, Daerung Techno town 8,
481-11, Gasan-Dong,
Geumcheon-Gu, Seoul, Korea

TEL : (822)2163-0060~0065
FAX : (822)2163-0066
E-mail : belton@unitel.co.kr

ROTARY SWITCH

(BTDS SERIES) **(DIGITAL SWITCHES)** CAT.NO.: BTDS20-2

Suggested Ordering Code

BTDS20H	-	1	0	8	-	R	2	0	-	1

*

Series

Number of wafer

Number of sections	1section	2section	3section
Code	1	2	3

Number of Stpper or positions

Number of stpper or positions	8	10	12	16	18	24	32	40
Code	08	10	12	16	18	24	32	40

Shaft length

Shaft length	15	20	25	30
Code	15	20	25	30

Shaft style

Shaft style	18-tooth serration shaft	Round shaft with groove	Flat shaft
Code	S	R	F

* Output code

Output code	Binary (Positive)	Binary (Complementary)	BCD (Positive)	BCD (Complementary)	Gray	CTS
Code	1	2	3	4	5	6

Output codes

Code	Number of positions / Position / Terminal	1	2	3	4	5	6	7	8	9	10	11	12	13	14	15	16	17	18	19	20	21	22	23	24	25	26	27	28	29	30	31	32	33	34	35	36	37	38	39	40
									8		10		12				16		18						24								32								40
Binary (positive)	1		●		●		●		●		●		●		●		●		●		●		●		●		●		●		●		●		●		●		●		●
	2			●	●			●	●			●	●			●	●			●	●			●	●			●	●			●	●			●	●			●	●
	3					●	●	●	●					●	●	●	●					●	●	●	●					●	●	●	●					●	●	●	●
	4									●	●	●	●	●	●	●	●									●	●	●	●	●	●	●	●								
	5																	●	●	●	●	●	●	●	●	●	●	●	●	●	●	●	●								
	6																																	●	●	●	●	●	●	●	●
Binary (complementary)	1	●		●		●		●		●		●		●		●		●		●		●		●		●		●		●		●		●		●		●		●	
	2	●	●			●	●			●	●			●	●			●	●			●	●			●	●			●	●			●	●			●	●		
	3	●	●	●	●					●	●	●	●					●	●	●	●					●	●	●	●					●	●	●	●				
	4	●	●	●	●	●	●	●	●									●	●	●	●	●	●	●	●									●	●	●	●	●	●	●	●
	5	●	●	●	●	●	●	●	●	●	●	●	●	●	●	●	●																	●	●	●	●	●	●	●	●
	6	●	●	●	●	●	●	●	●	●	●	●	●	●	●	●	●	●	●	●	●	●	●	●	●	●	●	●	●	●	●	●	●								
BCD (positive)	1		●		●		●		●		●		●		●		●		●		●		●		●		●		●		●		●		●		●		●		●
	2			●	●			●	●					●	●			●	●					●	●			●	●					●	●			●	●		
	3					●	●	●	●							●	●	●	●							●	●	●	●							●	●	●	●		
	4									●	●									●	●									●	●									●	●
	5											●	●	●	●	●	●	●	●	●	●											●	●	●	●	●	●	●	●	●	●
	6																					●	●	●	●	●	●	●	●	●	●	●	●	●	●	●	●	●	●	●	●
BCD (complementary)	1	●		●		●		●		●		●		●		●	●	●		●		●		●		●		●		●		●		●		●		●		●	
	2	●	●			●	●			●	●	●	●			●				●	●	●	●			●	●			●	●	●	●			●	●			●	●
	3	●	●	●	●					●	●	●	●	●	●					●	●	●	●	●	●					●	●	●	●	●	●					●	●
	4	●	●	●	●	●	●	●	●			●	●	●	●	●	●	●	●			●	●	●	●	●	●	●	●			●	●	●	●	●	●	●	●		
	5	●	●	●	●	●	●	●	●	●	●											●	●	●	●	●	●	●	●	●	●										
	6	●	●	●	●	●	●	●	●	●	●	●	●	●	●	●	●	●	●	●	●																				
Gray	1		●	●			●	●			●	●			●	●			●	●			●	●			●	●			●	●			●	●			●	●	
	2			●	●	●	●					●	●	●	●					●	●	●	●					●	●	●	●					●	●	●	●		
	3					●	●	●	●	●	●	●	●									●	●	●	●	●	●	●	●									●	●	●	●
	4									●	●	●	●	●	●	●	●	●	●	●	●	●	●	●	●																
	5																	●	●	●	●	●	●	●	●	●	●	●	●	●	●	●	●	●	●	●	●	●	●	●	●
	6																																	●	●	●	●	●	●	●	●
C.T.S	1							●	●	●	●	●	●	●	●																										
	2					●	●	●	●					●	●	●	●																								
	3		●	●			●	●			●	●			●	●																									
	4			●	●	●	●	●	●	●	●																														

Belton Engineering Co., Ltd.

Unit 1208, Daerung Techno town 8,
481-11, Gasan-Dong,
Geumcheon-Gu, Seoul, Korea

TEL : (822)2163-0060~0065
FAX : (822)2163-0066
E-mail : belton@unitel.co.kr

Rotary digital code switch with push-on switch function

Features

- Wonderful design for Digital code switch + Push-on switch
- Suitable for setting code with push-on switch
  Detent number from 8 to 40 are available

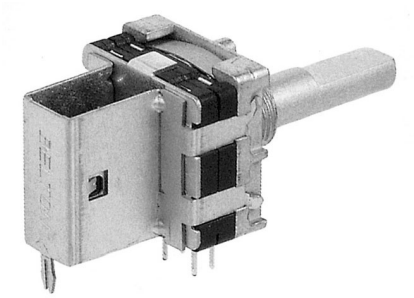

Applications

- For all kinds of digital program switches and C.B transceiver
- Special use for guitar amp and mixing console with DSP program

Standard Dimensions

BTDS20HPT-□□□-□□□-□

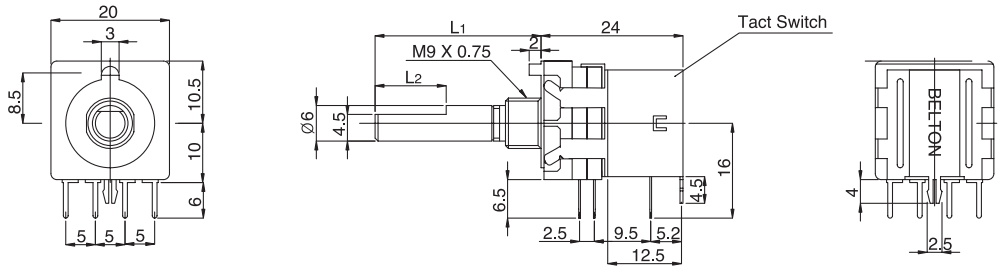

P.C.B Mounting Hole

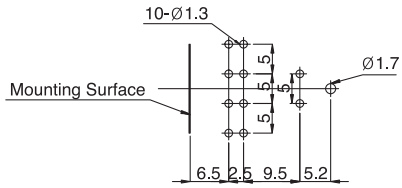

Product Classifications

NO.OF POSITIONS	8	10	16	18	24	32	40
ANGLE OF CHANGEOVER	45°	36°	22.5°	20°	15°	11.25°	9°
BITS PER STEP	7						
NO.OF WAFER	1-3						
CODE	BINARY, BCD, GRAY, LED						
SHAFT SHAPE	18SERRATION, R AND FLATE						

Electrical specifications

- Electrical Rating: 0.1A, 15V DC
- Contact Resistance: 1 mohms(max)
- Insulation Resistance: 100 Mohms, 500V DC
- Withstanding Voltage: 1Min. at 250V AC
- Circuits: Refer to the table of cut put code
- Push-on switch: 50mA, 12V DC

Rotational Torques

- Single shaft: 700 ± 300gf · cm
- Rotational torque can be changeable by option
- Push-on torque can be changeable by option

Mechanical specifications

- Electrical life: 10,000 cycles min
- Terminal strength: 250gf · cm for 1 min
- Solderability: 230 ± 5°C, 3 sec
- Changeover angle: Refer to the Product Classification table

Push-on switch(Tact switch) specifications

- Push travel: 0.8 ± 0.2mm Max
- Push force: 1,500 ± 500gf · cm
- Electrical Rating: 0.5A, 12V DC

Belton Engineering Co., Ltd.

Unit 1208, Daerung Techno town 8,
481-11, Gasan-Dong,
Geumcheon-Gu, Seoul, Korea

TEL : (822)2163-0060~0065
FAX : (822)2163-0066
E-mail : belton@unitel.co.kr

MECH. & OPTICAL ENCODER SWITCH

- 12mm Mechanical Rotary Encoder ..... 41~43
- 18mm Optical Rotary Encoder(Economic)....44~46
- 20mm Optical Rotary Encoder(General) .....47~49
- 33∅ Knob for Encoder 50

12mm Mechanical highly reliable and miniaturized rotary encoder(Horizontal mounting type)

Features

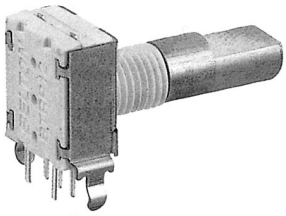

- Designed for horizontal P.C.Board mounting version
- Compact size(12.3mm; height X 11.5mm; width)
- Available with mechanical 30 steps clicks intergrated push-button switch in
- 30 pulses per rotation

Applications

- All kinds of level control, tuning and timer setting in audio, visual equipement, ordinary household electric appliances, radio and communication equipments, etc.

Standard Dimensions

BTRP12H-□□□□-□□□

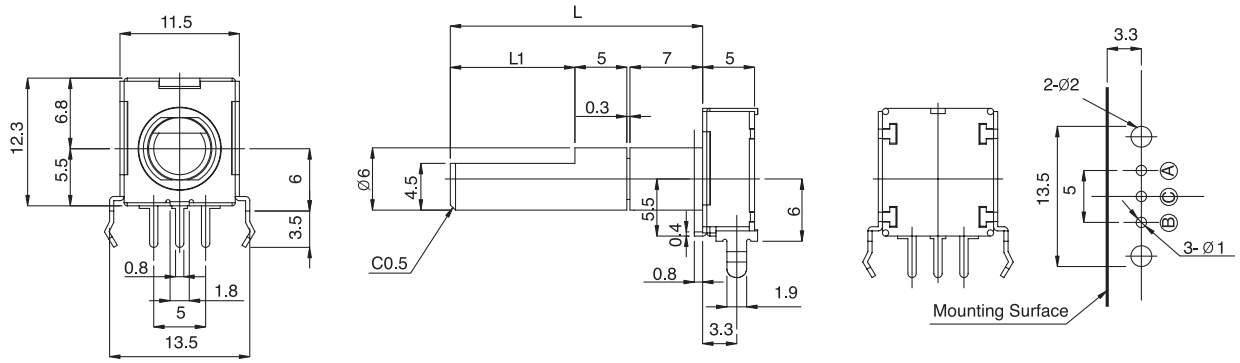

P.C.B Mounting Hole

Unit : mm

BTRP12HS-□□□□-□□□

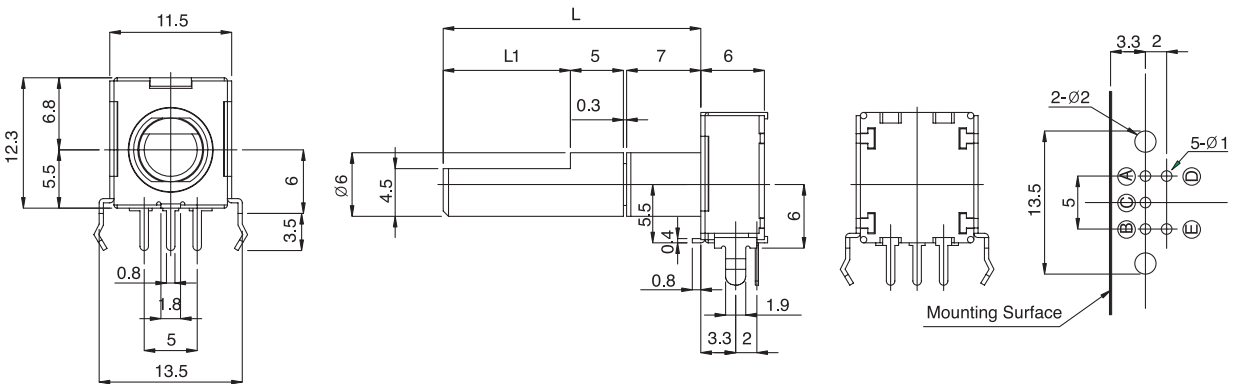

P.C.B Mounting Hole

Unit : mm

Belton Engineering Co., Ltd.

Unit 1208, Daerung Techno town 8,
481-11, Gasan-Dong,
Geumcheon-Gu, Seoul, Korea

TEL : (822)2163-0060~0065
FAX : (822)2163-0066
E-mail : belton@unitel.co.kr

REVERBERATION UNIT
ROTARY SWITCH
ENCODER SWITCH
VACUUM TUBE SOCKET & SHIELD
POWER ENTRY
JACK & XLR SOCKET

12mm Mechanical highly reliable and miniaturized rotary encoder(Vertical mounting type)

Features

- Designed for Vertical P.C.Board mounting version
- Compact size(12.3mm; height X 11.5mm; width)
- Available with mechanical 30 steps clicks intergrated push-button switch in
- 30 pulses per rotation

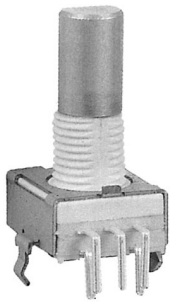

Applications

- All kinds of level control, tuning and timer setting in audio, visual equipments, ordinary household electric appliances, radio and communication equipments, etc.

Standard Dimensions

BTRP12V-□□□□-□□□

P.C.B Mounting Hole

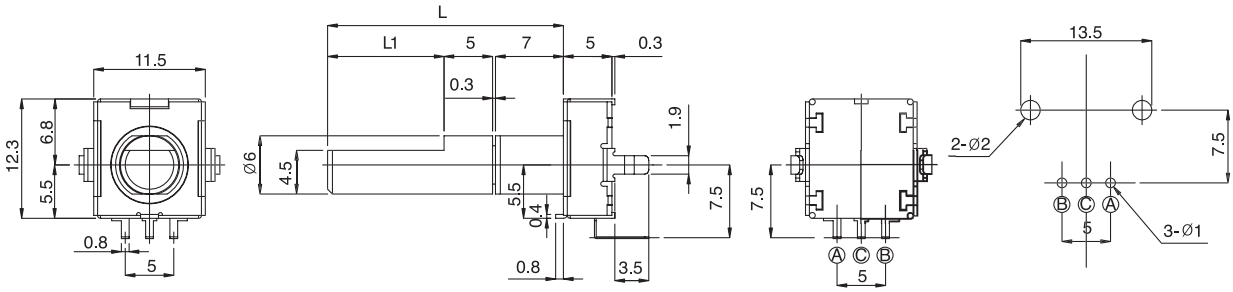

Unit : mm

BTRP12VS-□□□□-□□□

P.C.B Mounting Hole

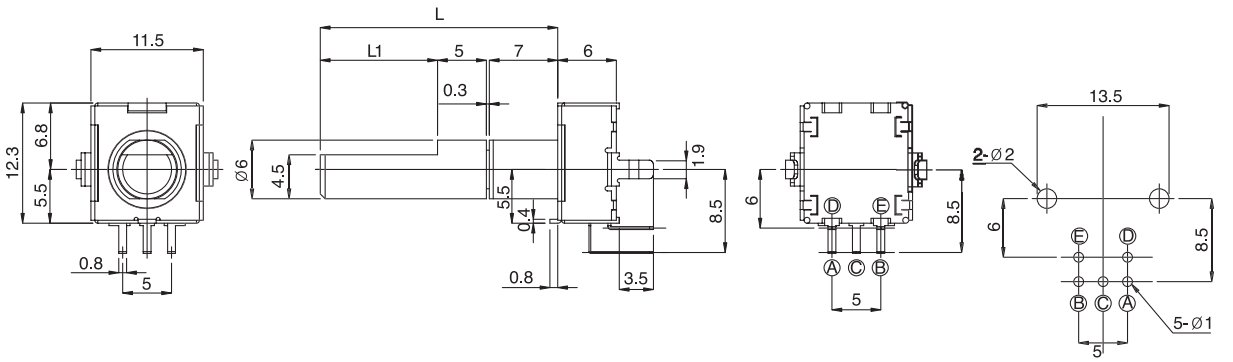

Unit : mm

Belton Engineering Co., Ltd.

Unit 1208, Daerung Techno town 8,
481-11, Gasan-Dong,
Geumcheon-Gu, Seoul, Korea

TEL : (822)2163-0060~0065
FAX : (822)2163-0066
E-mail : belton@unitel.co.kr

ROTARY ENCODER

(BTRP12 SERIES)

CAT. NO.: BTRP12-3

Product Classifications

Mounting Method	Mechanical Click	Push-button switch	Pulse no.	Part no.
Horizontal (BTRP12H)	X	X	30	BTRP12H-030N-Shaft
	O	X	30	BTRP12H-030C-Shaft
	X	O	30	BTRP12HS-030N-Shaft
	O	O	30	BTRP12HS-030C-Shaft
Vertical (BTRP12V)	X	X	30	BTRP12V-030N-Shaft
	O	X	30	BTRP12V-030C-Shaft
	X	O	30	BTRP12VS-030N-Shaft
	O	O	30	BTRP12VS-030C-Shaft

Terminal code

Horizontal

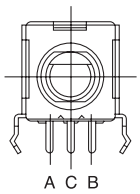

Vertical

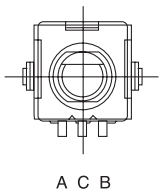

A, B: Output terminal
C : Common termianl

Output Wave

Clockwise

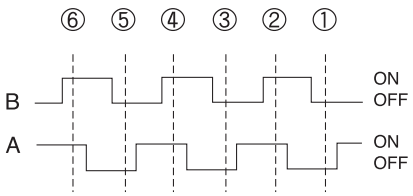

Counter clockwise

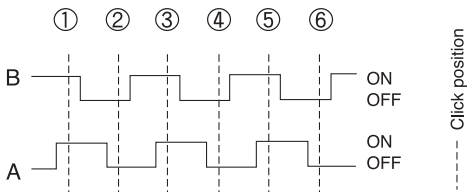

Electrical specifications

- Electrical Rating: Encoder: 10mA, 5V DC
  Push-buttion switch: 50mA, 12V DC
- Chattering & Bounce: 3ms Max.
- Contact Resistance: 100 mohms Max.
- Insulation Resistance: 100 mohms at 250V DC
- Withstanding Voltage: 1min. at 300V AC
- Electrical Life: Over 50,000 cycles

Mechanical specifications

- Contact: Gold plated on the PBS
- Click no.: 30 positions per rotation=12°
- Rotational Torque: 200 ± 70 gf · cm
- Mechanical Life: Over 100,000 cycles
- Panel mounting screw strength: 5 kgf · cm
- Soldering Temp.: 5 sec. on the 260° C
- Temp. Range of Operating: -20° C~+80° C

Suggested Ordering Code

BTRP12HS	-	0	3	0	N	-	R	Shaft

Series

Mounting method

Horizontal	Vertical
H	V

Push-button switch

Without	With
O	S

No.of Pulse
30 fixed

Shaft Length
By Specification

Shaft style

18-tooth serration	Round	Flat
S	R	F

Mech. Click

Without	With
N	C

Belton Engineering Co., Ltd.
Unit 1208, Daerung Techno town 8,
481-11, Gasan-Dong,
Geumcheon-Gu, Seoul, Korea
TEL : (822)2163-0060~0065
FAX : (822)2163-0066
E-mail : belton@unitel.co.kr

REVERBERATION UNIT
ROTARY SWITCH
ENCODER SWITCH
VACUUM TUBE SOCKET & SHIELD
POWER ENTRY
JACK & XLR SOCKET

18mm Economic type Optical Encoder with push-button switch in(Horizontal mounting type)

Features

NEW

BTREE18H Series;

- Zn diecasting housing with metal shaft
- 1 million life with horizontal mounting type
- Fixed 25 pulses per rotation with fine square wave of output by adopting proper IC and chip mounted circuits
- 25 steps of mechanical click and capable to build push-button switch in
- Light weight 20g and 18mm square size

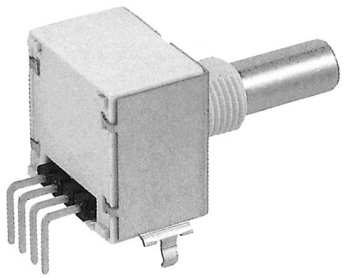

Applications

- All kinds of level control, tuning and position setting in the digitalized medical, measuring, radio equipments and communication equipments, etc.

Standard Dimensions

BTRE E18H-□□□□-□□□

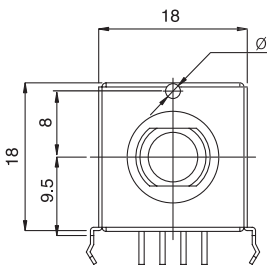

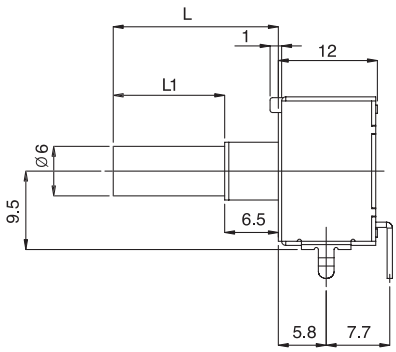

P.C.B Mounting Hole

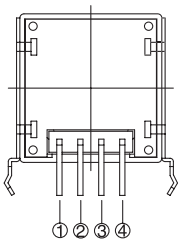

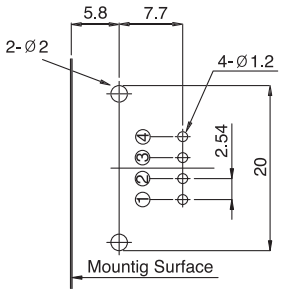

Unit : mm

Terminal	Connection
1	+5V
2	B Output
3	A Output
4	Ground

Belton Engineering Co., Ltd.

Unit 1208, Daerung Techno town 8,
481-11, Gasan-Dong,
Geumcheon-Gu, Seoul, Korea

TEL : (822)2163-0060~0065
FAX : (822)2163-0066
E-mail : belton@unitel.co.kr

18mm Economic type Optical Encoder with push-button switch in(Vertical mounting type)

Features

BTREE18V Series;

- Zn diecasting housing with metal shaft
- 1 million life with vertical mounting type
- Fixed 25 pulses per rotation with fine square wave of output by adopting proper IC and chip mounted circuits
- 25 steps of mechanical click and capable to build push-button switch in
- Light weight 20g and 18mm square size

NEW

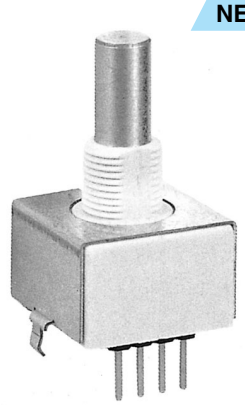

Applications

- All kinds of level control, tuning and position setting in the digitalized medical, measuring, radio equipments and communication equipments, etc.

Standard Dimensions

BTREE18V-□□□□-□□□

P.C.B Mounting Hole

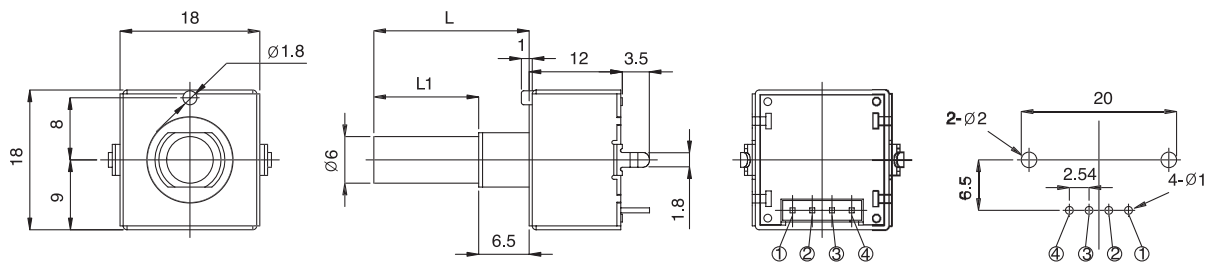

Unit : mm

Terminal	Connection
1	+5V
2	B Output
3	A Output
4	Ground

Belton Engineering Co., Ltd.

Unit 1208, Daerung Techno town 8,
481-11, Gasan-Dong,
Geumcheon-Gu, Seoul, Korea

TEL : (822)2163-0060~0065
FAX : (822)2163-0066
E-mail : belton@unitel.co.kr

OPTICAL ENCODER

(BTREE18 & BTREG18 SERIES)

CAT.NO.: BTRE18-3

REVERBERATION UNIT
ROTARY SWITCH
ENCODER SWITCH
VACUUM TUBE SOCKET & SHIELD
POWER ENTRY
JACK & XLR SOCKET

Product Classifications

Mounting Method	Mechanical Click	Push-button switch	Pulse no.	Part no.
Horizontal (BTREE18H)	X	X	25	BTREE18H-025N-Shaft
	O	X	25	BTREE18H-025C-Shaft
	X	O	25	BTREE18HS-025N-Shaft
	O	O	25	BTREE18HS-025C-Shaft
Vertical (BTREE18V)	X	X	25	BTREE18V-025N-Shaft
	O	X	25	BTREE18V-025C-Shaft
	X	O	25	BTREE18VS-025N-Shaft
	O	O	25	BTREE18VS-025C-Shaft

Mounting Method	Mechanical Click	Push-button switch	Pulse no.	Part no.
Horizontal (BTREG18H)	X	X	25	BTREG18H-025N-Shaft
	O	X	25	BTREG18H-025C-Shaft
	X	O	25	BTREG18HS-025N-Shaft
	O	O	25	BTREG18HS-025C-Shaft
Vertical (BTREG18V)	X	X	25	BTREG18V-025N-Shaft
	O	X	25	BTREG18V-025C-Shaft
	X	O	25	BTREG18VS-025N-Shaft
	O	O	25	BTREG18VS-025C-Shaft

Output wave

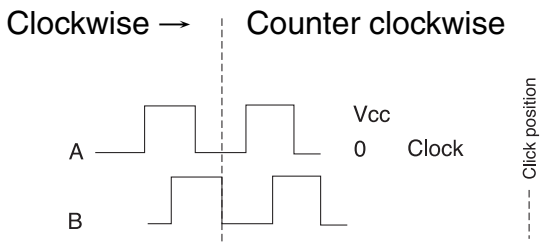

Electrical specifications

- Supplying Voltage: BTREE18 Series: DC 5V ± 5%
  Push-button switch: 50mA, 12V DC
- Supplying Current: 20mA Max.
- Phase difference: 90° ± 45°
- Output Wave: Incremental with Rectangular Wave
- Resolution: 25 Pulses / rotation
- Frequency Response: 100Hz
- Insulation Resistance: 100 Mohms on 250V DC
- Withstanding Voltage: 1min. at 300V AC
- Electrical Life: Over 1,000,000 cycles

Mechanical specifications

- Mechanical Click no.: 25 positions only per rotation = 14.4°
- Rotational Torque: 50 ± 20 gf · cm
- Mechanical Life: Over 1,000,000 cycles
- Soldering Temp.: 5 sec. on the 260° C
- Temp. Range of Operating: 0° C~+60° C
- Panel mounting screw strength: BTREE18 Series: 8 Kgf · cm

Suggested Ordering Code

BTREE18HS - 0 2 5 N - R Shaft

Series: BTREG18

Mounting method

Horizontal	Vertical
H	V

Push-button switch

Without	With
O	S

No.of Pulse
25 fixed

Shaft Length
By Specification

Shaft Style

18-tooth serration	Round	Flat
S	R	F

Mech. Click

Without	With
N	C

Belton Engineering Co., Ltd.
Unit 1208, Daerung Techno town 8,
481-11, Gasan-Dong,
Geumcheon-Gu, Seoul, Korea
TEL : (822)2163-0060~0065
FAX : (822)2163-0066
E-mail : belton@unitel.co.kr

20mm highly reliable and long life Optical Encoder (Horizontal mounting type)

NEW

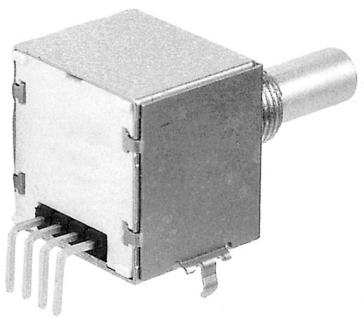

Features

BTREG20H Series;

- 20mm square size by Zn diecasting housing with metal shaft
- 2 million life of horizontal mounting type
- Changeable output pulse from 25 to 250 by requirement
- Fine square wave of output by adopting proper IC and chip mounted circuits
- 25 steps of mechanical click is available if need

BTRES20H(Long life) Series;

- 20mm square size by Zn diecasting housing with metal shaft
- 10 million life with horizontal mounting type
- Changeable output pulse from 25 to 250 by requirement
- Fine square wave of output by adopting proper IC and chip mounted circuits

Applications

- All kinds of level control, tuning and position setting in the digitalized medical, measuring, radio equipments and communication equipments, etc.

Standard Dimensions

BTRE□20H-□□□-□□□

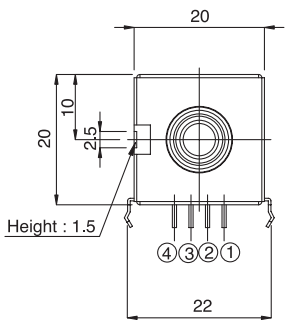

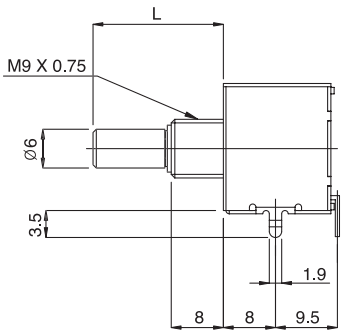

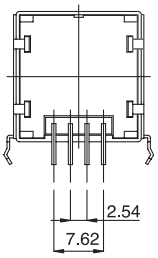

P.C.B Mounting Hole

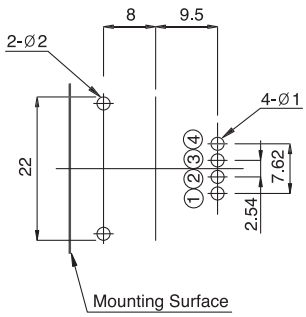

Unit : mm

Terminal	Connection
1	+5V
2	B Output
3	A Output
4	Ground

Belton Engineering Co., Ltd.

Unit 1208, Daerung Techno town 8,
481-11, Gasan-Dong,
Geumcheon-Gu, Seoul, Korea

TEL : (822)2163-0060~0065
FAX : (822)2163-0066
E-mail : belton@unitel.co.kr

REVERBERATION UNIT
ROTARY SWITCH
ENCODER SWITCH
VACUUM TUBE SOCKET & SHIELD
POWER ENTRY
JACK & XLR SOCKET

20mm highly reliable and long life Optical Encoder (Vertical mounting type)

NEW

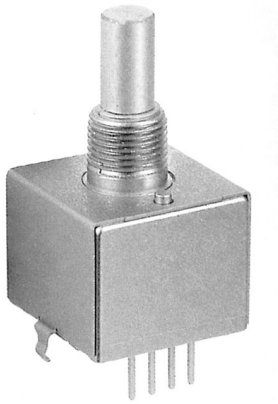

Features

BTREG20V Series;

- 20mm square size by Zn diecasting housing with metal shaft
- 2 million life of vertical mounting type
- Changeable output pulse from 25 to 250 by requirement
- Fine square wave of output by adopting proper IC and chip mounted circuits
- 25 steps of mechanical click is available if need

BTRES20V(Long life) Series;

- 20mm square size by Zn diecasting housing with metal shaft
- 10 million life with vertical mounting type
- Changeable output pulse from 25 to 250 by requirement
- Fine square wave of output by adopting proper IC and chip mounted circuits

Applications

- All kinds of level control, tuning and position setting in the digital, medical, measuring, radio equipments and communication equipments, etc.

Standard Dimensions

BTRE□20V-□□□-□□□

P.C.B Mounting Hole

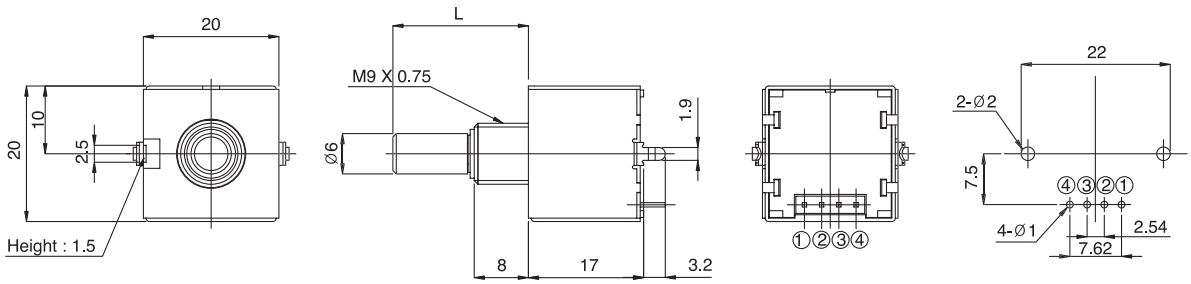

Unit : mm

Terminal	Connection
1	+5V
2	B Output
3	A Output
4	Ground

Belton Engineering Co., Ltd.

Unit 1208, Daerung Techno town 8,
481-11, Gasan-Dong,
Geumcheon-Gu, Seoul, Korea

TEL : (822)2163-0060~0065
FAX : (822)2163-0066
E-mail : belton@unitel.co.kr

OPTICAL ENCODER

(BTREG20 & BTRES20 SERIES)

CAT.NO.: BTRE20-3

Product Classifications

Classification	Mounting Method	Mechanical Click	Pulse no.	Part no.
General use (BTREG20)	Horizontal (BTREG20H)	X	25-200	BTREG20H-025N-Shaft
		O	25-200	BTREG20H-025C-Shaft
	Vertical (BTREG20V)	X	25-200	BTREG20V-025N-Shaft
		O	25-200	BTREG20V-025C-Shaft
Spacial use (BTRES20)	Horizontal (BTRES20H)	X	25-200	BTRES20H-025N-Shaft
		O	25-200	BTRES20H-025C-Shaft
	Vertical (BTRES20V)	X	25-200	BTRES20V-025N-Shaft
		O	25-200	BTRES20V-025C-Shaft

Output wave

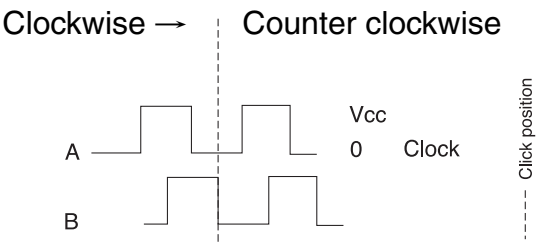

Electrical specifications

- Supplying Voltage: DC 5V ± 5%
- Supplying Current: 30mA Max.
- Phase difference: 90° ± 45°
- Resolution: 25 to 200 Pulses / rotation
- Output Wave: Incremental with Rectangular Wave
- Frequency Response: 100 to 500 Hz
- Insulation Resistance: 100 Mohms on 250V DC
- Withstanding Voltage: 1min. at 300V AC
- Electrical Life: Over 1,000,000 to 20,000,000 cycles

Mechanical specifications

- Rotational Torque: 50 ± 20 gf · cm
- Mechanical Life: Over 1,000,000 to 10,000,000 cycles
- Soldering Temp.: 5 sec. on the 260° C
- Temp. Range of Operating: 0° C~+60° C
- Panel mounting screw strength: 8 Kgf · cm

Suggested ordering code

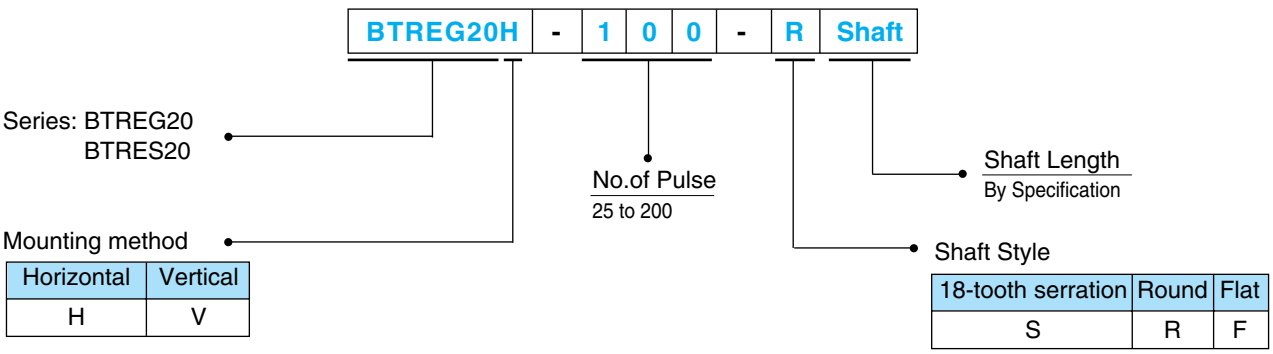

Belton Engineering Co., Ltd.
Unit 1208, Daerung Techno town 8,
481-11, Gasan-Dong,
Geumcheon-Gu, Seoul, Korea
TEL : (822)2163-0060~0065
FAX : (822)2163-0066
E-mail : belton@unitel.co.kr

(BTKNOB)

33mm diameter Knob for Rotary Encoder

NEW

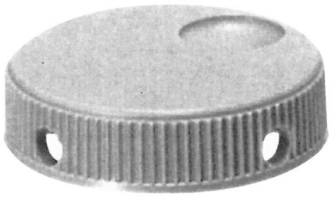

Feature

- 33mm diameter X 10mm height knob
- 2 hexagonal screws used for safety joint
- Designed with soft touch feel surface

Applications

- Specially designed for Rotary switch and Rotary encoder

Standard Dimensions

BTKNOB-3310

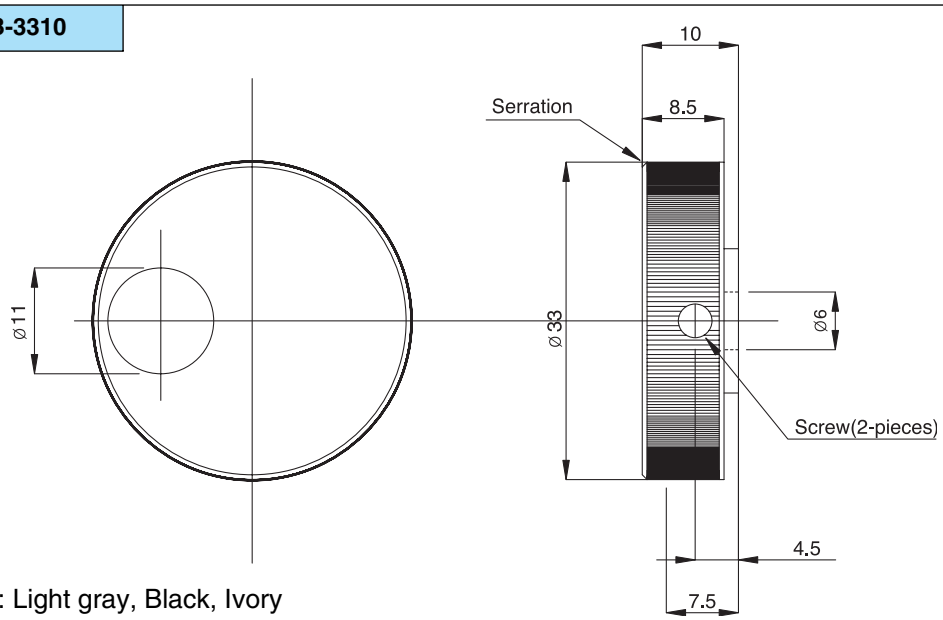

Color : Light gray, Black, Ivory

Suggested ordering code

BTKNOB	-	33	10	-	G

Series

Diameter of knob

33		

Knob color

G	Light gray
B	Black
I	Ivory

Thickness of knob

10		

Belton Engineering Co., Ltd.

Unit 1208, Daerung Techno town 8,
481-11, Gasan-Dong,
Geumcheon-Gu, Seoul, Korea

TEL : (822)2163-0060~0065
FAX : (822)2163-0066
E-mail : belton@unitel.co.kr

VACUUM TUBE SOCKET & TUBE SHIELD

- 9 pin Vacuum tube socket & shield ..... 52~55
- 8 pin Vacuum tube socket & retainer ..... 56~58

REVERBERATION UNIT
ROTARY SWITCH
ENCODER SWITCH
VACUUM TUBE SOCKET & SHIELD
POWER ENTRY
JACK & XLR SOCKET

9 Pin Miniature Conventional Wiring and PCB Type Socket

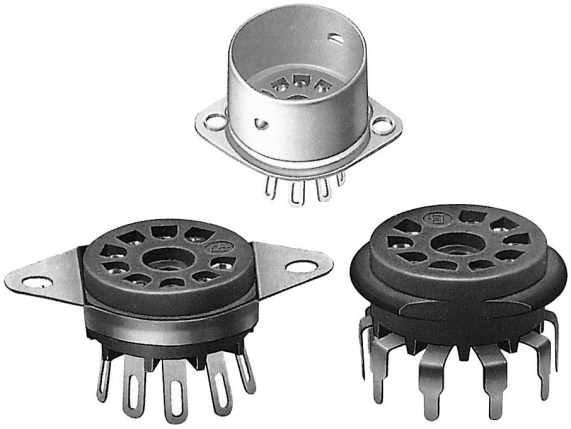

Features

- With panel saddle mounting
- Phosphorous bronze pin terminal with tin plating
- Glassfiber filled PPS Insulating material
- Easy mount with collar attached socket

Applications

- Applicable to all types of electric and electronic equipments using vacuum tube

Dimensions

VT9-ST-1

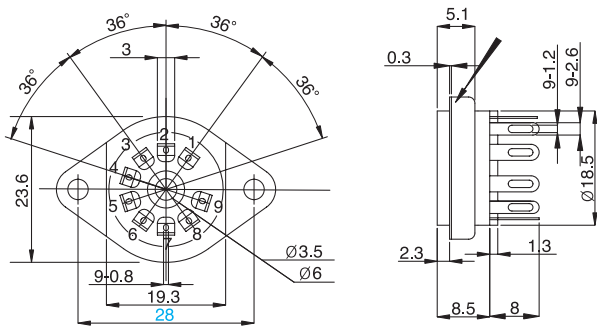

VT9-ST-2

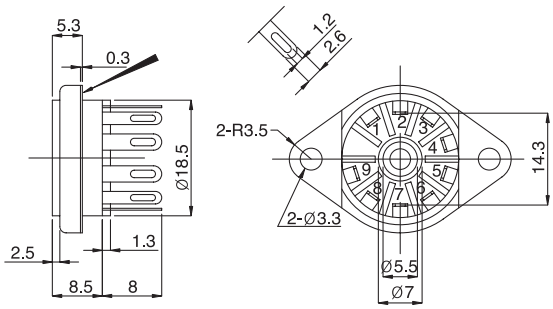

VT9-PT

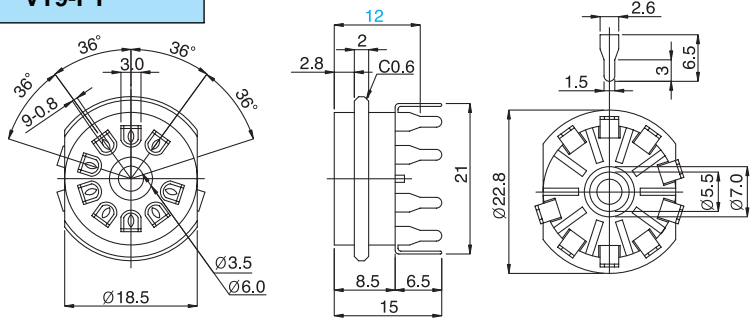

P.C.B Mounting Hole

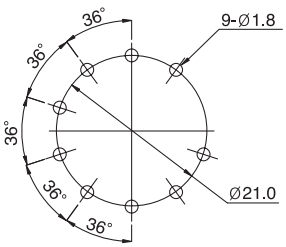

VT9-ST-C

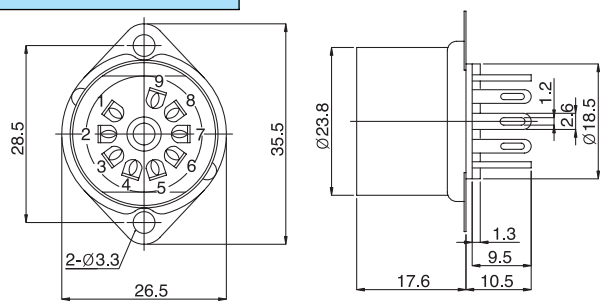

VT9-PT-C

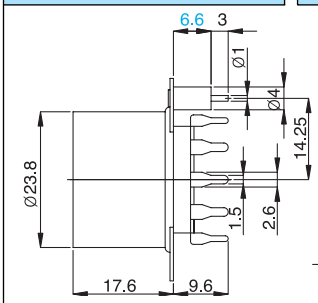

P.C.B Mounting Hole

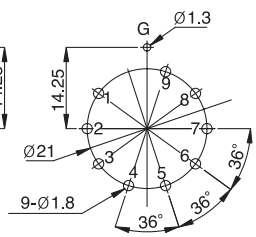

Belton Engineering Co., Ltd.

Unit 1208, Daerung Techno town 8,
481-11, Gasan-Dong,
Geumcheon-Gu, Seoul, Korea

TEL : (822)2163-0060~0065
FAX : (822)2163-0066
E-mail : belton@unitel.co.kr

VACUUM TUBE SOCKET

(VT9 SERIES) CAT.NO.: BVT9-2

Specially designed 9 pin vacuum tube socket for auto-wave solder

Features

- Safety attachment with 3 positions of mounting pi
- Easy mount with the precise designed tube pins
- Glassfiber filled PPS insulating material

PATENT

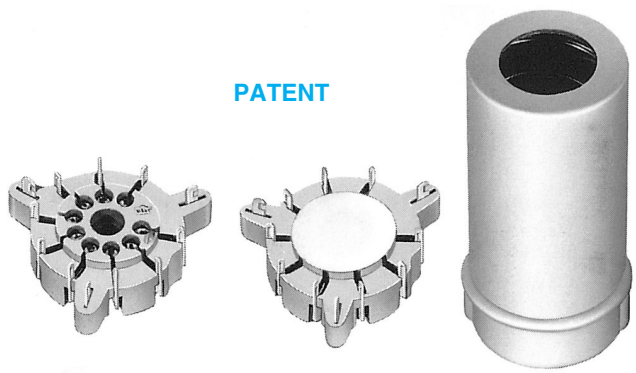

Applications

- Applicable to all types of electric and electronic equipments using vacuum tube

Dimensions

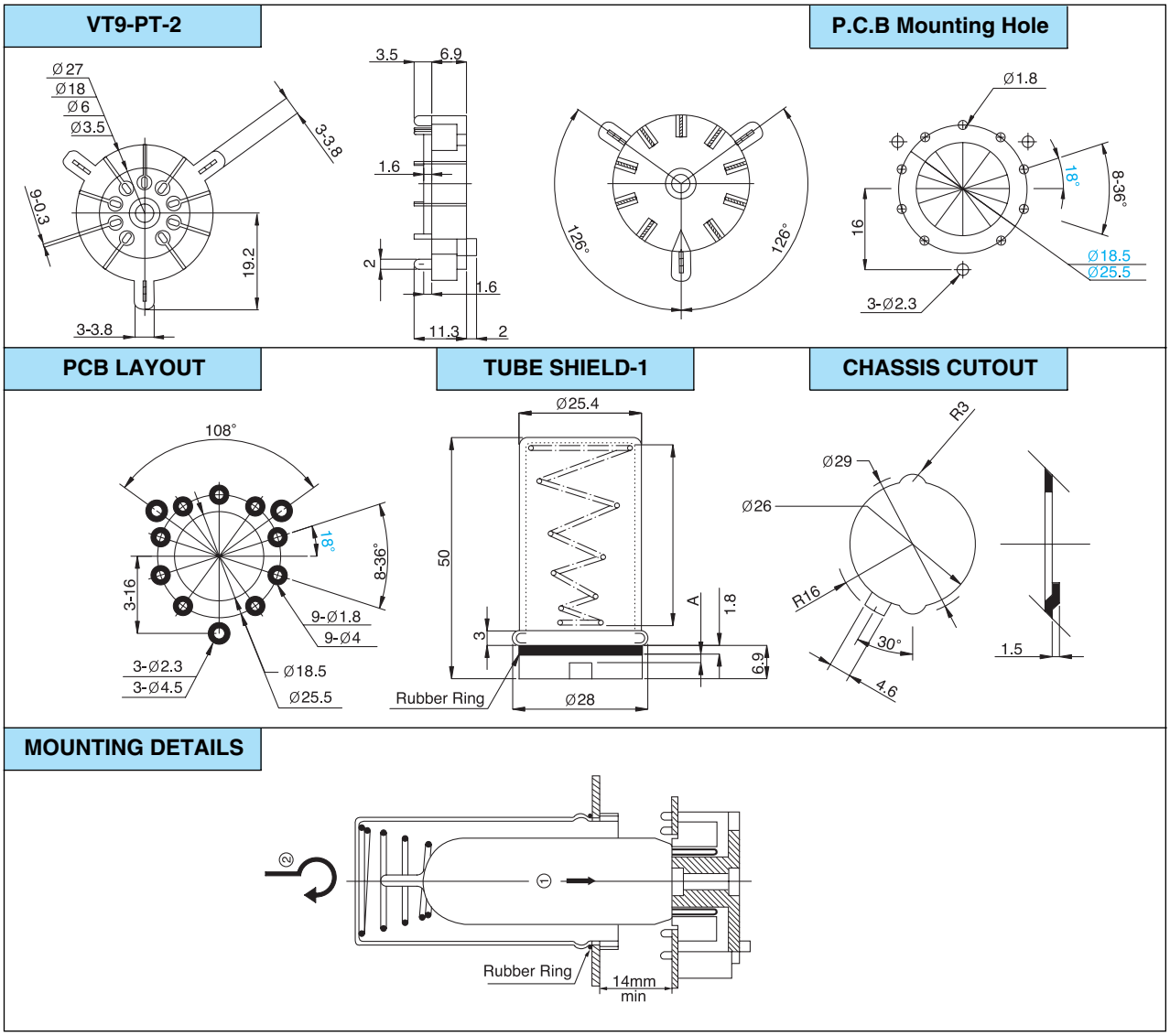

Belton Engineering Co., Ltd.

Unit 1208, Daerung Techno town 8,
481-11, Gasan-Dong,
Geumcheon-Gu, Seoul, Korea

TEL : (822)2163-0060~0065
FAX : (822)2163-0066
E-mail : belton@unitel.co.kr

REVERBERATION UNIT
ROTARY SWITCH
ENCODER SWITCH
VACUUM TUBE SOCKET & SHIELD
POWER ENTRY
JACK & XLR SOCKET

Precise designed tube shield and tube retainer for 8 & 9 pin socket

Applications

- Tube retainer-1 ; for use on the standard 8 pin socket(VT8-PT or ST)
- Tube retainer-2 ; for the VT8-PT-2 socket (special design for 8 pin)
- Tube shield-1 ; for the VT9-PT-2 socket (special design for 9 pin)
- Tube shield-2 ; for the standard 9 pin socket (VT9-ST or PT)

Dimensions

TUBE RETAINER-1

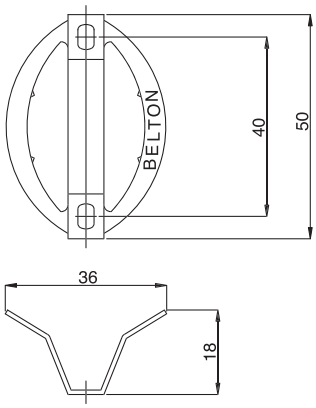

● Materials ; Spring plate with Ni plating

TUBE RETAINER-2

**Available to change the spring length by tube size

Tube retainer #2-1

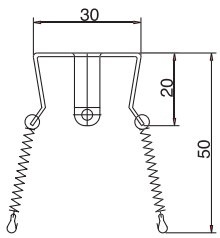

Tube retainer #2-2

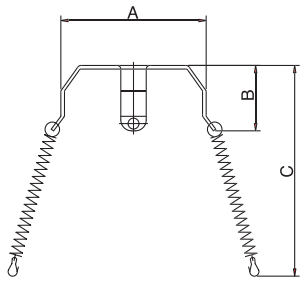

● Materials ; Steel plate with Ni plating and natural coil spring

TUBE SHIELD-1

Rubber Thick. (A)	Spring Leng. (B)
1.8mm	50mm
2.5mm	26mm

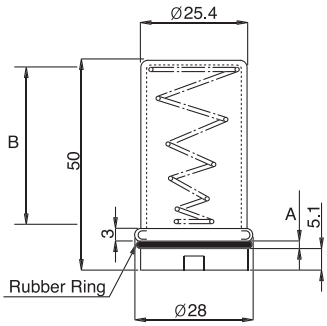

● Materials;Aluminum sleeve with natural coil spring

TUBE SHIELD-2

CAN Height (A)	Spring Leng. (B)
40mm	26mm
50mm	20mm

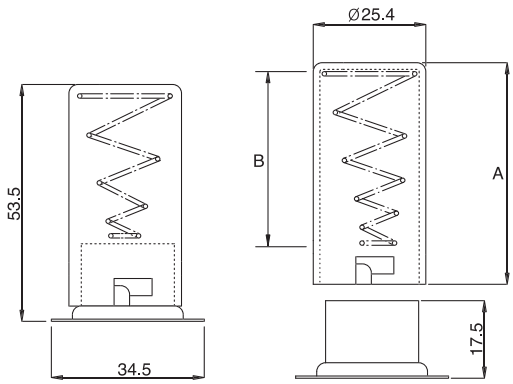

● Materials;Aluminum sleeve with natural coil spring

Belton Engineering Co., Ltd.

Unit 1208, Daerung Techno town 8,
481-11, Gasan-Dong,
Geumcheon-Gu, Seoul, Korea

TEL : (822)2163-0060~0065
FAX : (822)2163-0066
E-mail : belton@unitel.co.kr

Proposed mounting method of tube socket with tube shield

Progress order

TUBE RETAINER-1

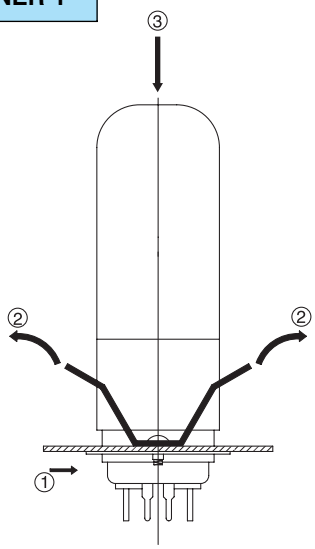

Progress order
1. Build tube socket on the chassis
2. Spread out the wing of tube retainer-1
3. Insert vacuum tube into the socket

TUBE RETAINER-2

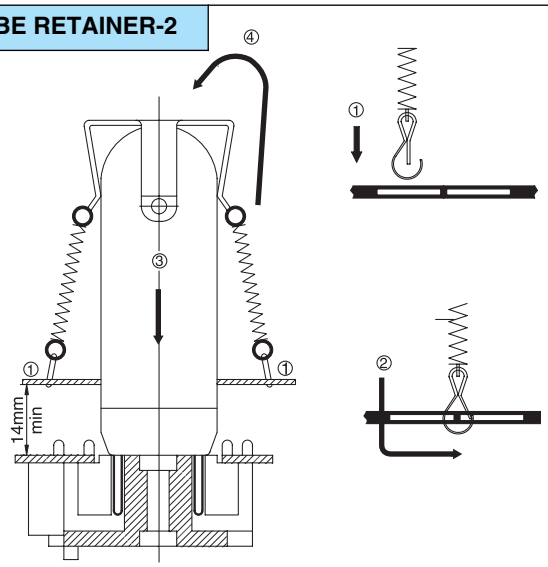

Progress order
1. Insert hook to the chassis hole
2. Push and hook up the hooks to the chassis
3. Insert the vacuum tube into the socket
4. Pull up tube retainer-2 and cap it on the top of tube

TUBE SHIELD-2

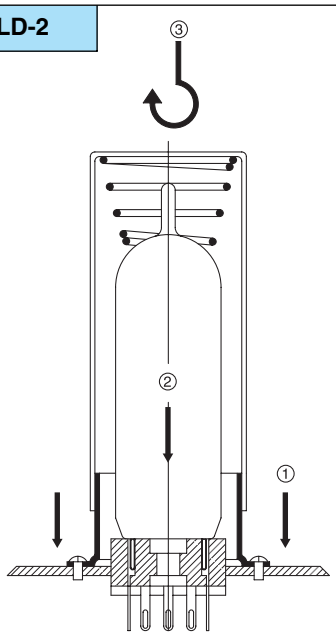

Progress order
1. Build collar on the chassis
2. Insert the tube into the socket
3. Cap and push the tube shield-2 and turn right till stop

TUBE SHIELD-1

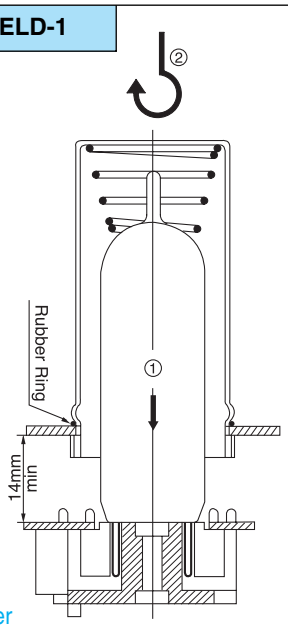

Progress order
1. Insert vacuum tube into the socket
2. Cap and push the tube shield-1 to the bottom and turn right till stop

Belton Engineering Co., Ltd.

Unit 1208, Daerung Techno town 8,
481-11, Gasan-Dong,
Geumcheon-Gu, Seoul, Korea

TEL : (822)2163-0060~0065
FAX : (822)2163-0066
E-mail : belton@unitel.co.kr

High Insulated 8 Pin Vacuum Tube Socket

Features

- With panel saddle mounting
- Easy mount with the saddle of extruded screw hole
- Phosphorus bronze terminal pin with solder plating
- Glassfiber filled PPS Insulating material

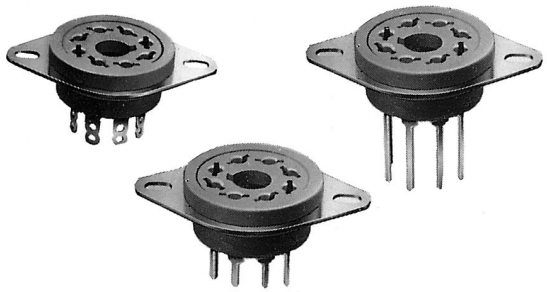

Applications

- Applicable to all types of electric and electronic equipments using vacuum tube and relay

Dimensions

VT8-ST

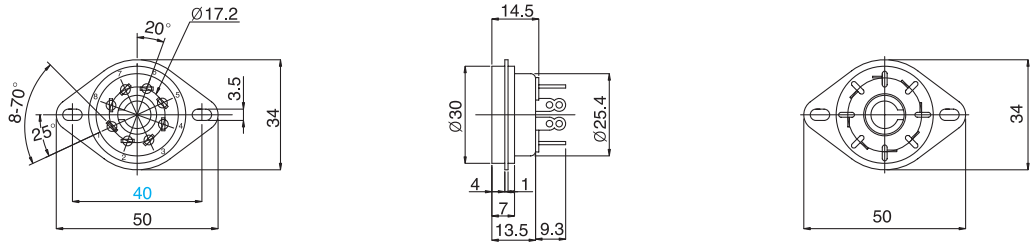

VT8-PT

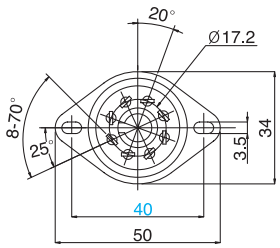

P.C.B Mounting Hole

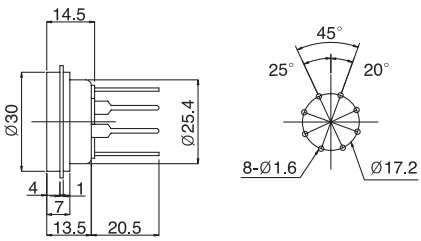

VT8-PTS

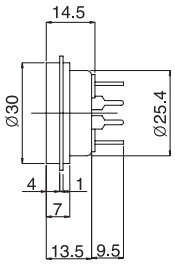

VT8-ST-1
VT8-PT-1

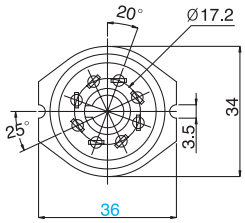

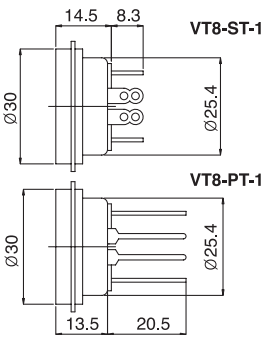

VT8-PTS-B

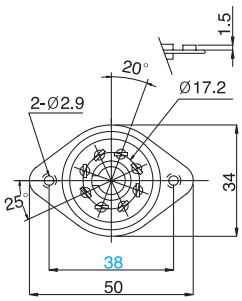

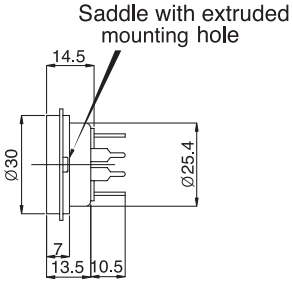

Belton Engineering Co., Ltd.

Unit 1208, Daerung Techno town 8,
481-11, Gasan-Dong,
Geumcheon-Gu, Seoul, Korea

TEL : (822)2163-0060~0065
FAX : (822)2163-0066
E-mail : belton@unitel.co.kr

Easy mounting 8 pin vacuum tube socket without additional fixing bolt and nut

NEW

PATENT

Features

- Fixing terminals on the P.C.B instead of bolt & nut
- Phosphorous bronze terminal pin with Sn plating
- Glassfiber filled PPS insulating material

Applications

- Applicable to all types of electric and electronic equipments using vacuum tube and relay

Dimensions

VT8-PTL-01

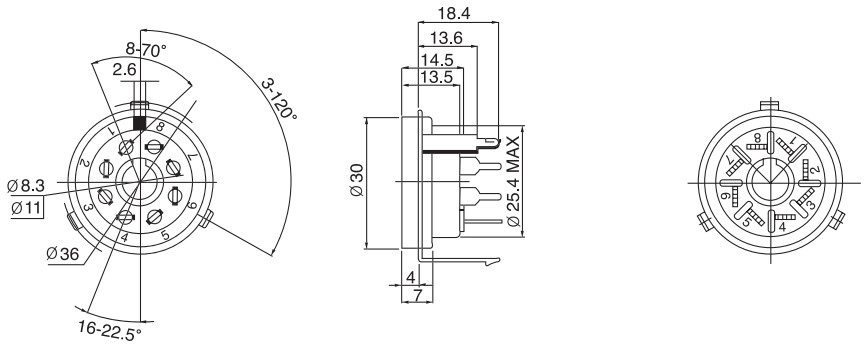

P.C.B PATTERN

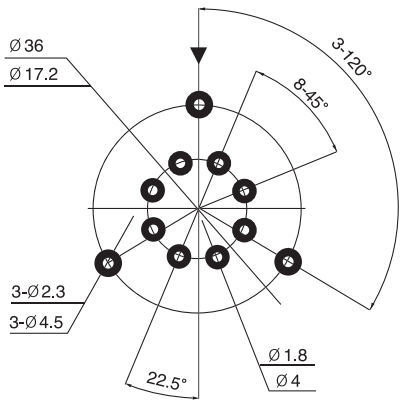

Belton Engineering Co., Ltd.

Unit 1208, Daerung Techno town 8,
481-11, Gasan-Dong,
Geumcheon-Gu, Seoul, Korea

TEL : (822)2163-0060~0065
FAX : (822)2163-0066
E-mail : belton@unitel.co.kr

VACUUM TUBE SOCKET

(VT8 SERIES)

CAT.NO.: BVT8-2

Specially designed 8 pin vacuum tube socket for auto-wave solder

Features

- Safety attachment with 3 positions of mounting pins
- Easy mount with the precise designed tube pins
- Glassfiber filled PPS insulating material

PATENT

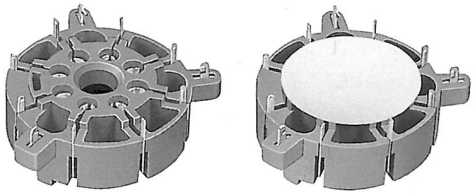

Applications

- Applicable to all types of electric and electronic equipments using vacuum tube

Dimensions

VT8-PT-2

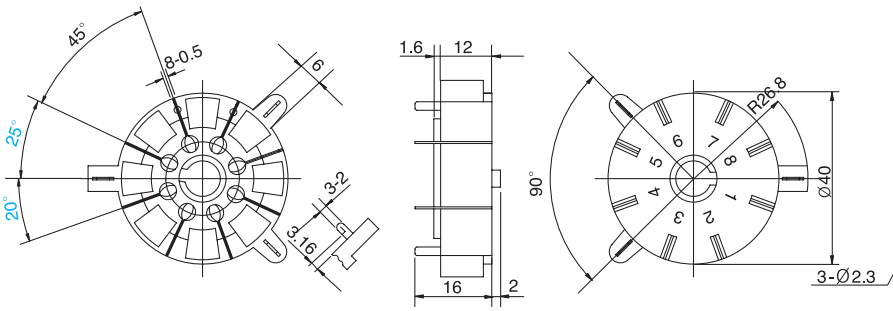

P.C.B Mounting Hole

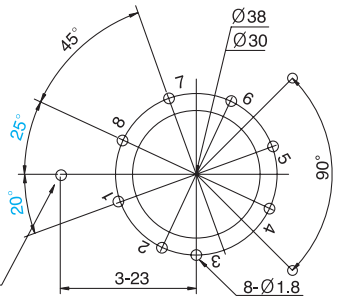

PCB LAYOUT

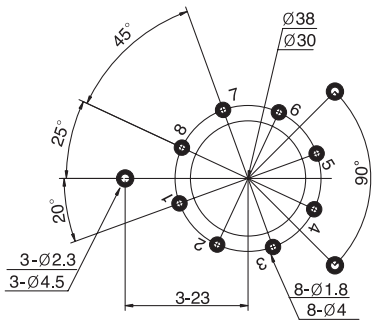

TUBE RETAINER-2

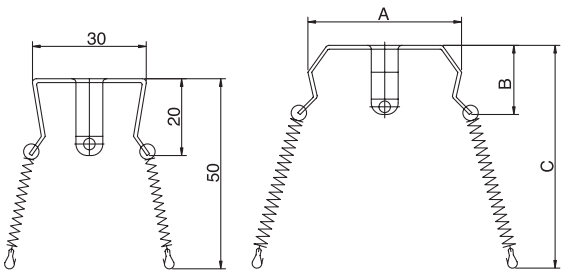

CHASSIS CUTOUT

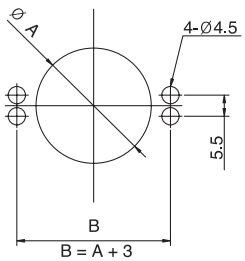

MOUNTING DETAILS OF 6V6

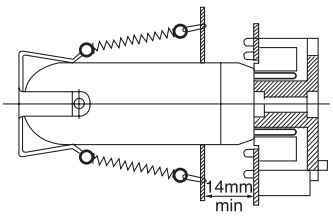

MOUNTING DETAILS OF 6L6

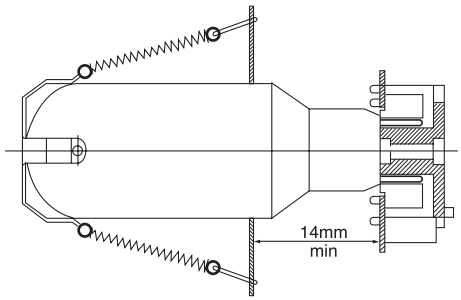

Belton Engineering Co., Ltd.

Unit 1208, Daerung Techno town 8,
481-11, Gasan-Dong,
Geumcheon-Gu, Seoul, Korea

TEL : (822)2163-0060~0065
FAX : (822)2163-0066
E-mail : belton@unitel.co.kr

POWER ENTRY MODULE

- AC inlet with 1 fuse holder ..... 60~61
- AC inlet with 2 fuses holder 62
- Compact AC inlet with 1 fuse holder 63

REVERBERATION UNIT
ROTARY SWITCH
ENCODER SWITCH
VACUUM TUBE SOCKET & SHIELD
POWER ENTRY
JACK & XLR SOCKET

AC inlet with Fuse Holder + 4 steps voltage selector function

Features

- Socket is made of glassfiber reinforced thermoplastic material
- Constructed by 1 pole Fuse Holder and 4 steps voltage selector(100, 120, 220, 240V)

Applications

- Applicable to all types of electronic equipments such as measuring instruments, electronic musical instruments and OA equipments.

Dimensions

BACI-□□

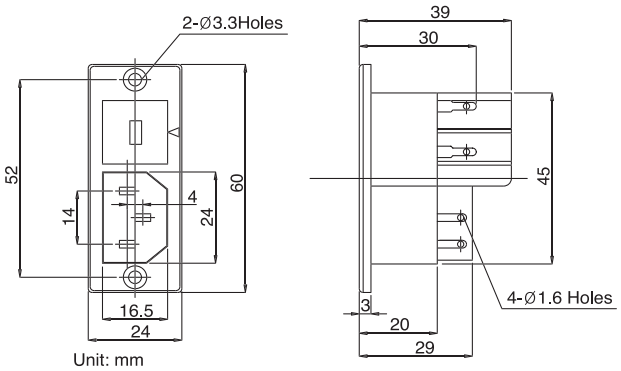

BACI-01 or BACI-03

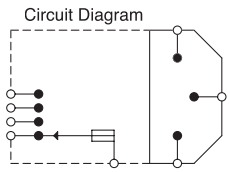

- BACI-01: USE ø 6.3 × 32mm Fuse
- BACI-03: USE ø 5 × 20mm Fuse

BACI-02 or BACI-04

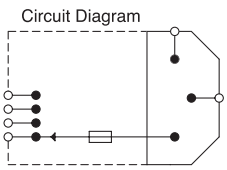

- BACI-02: USE ø 6.3 × 32mm Fuse
- BACI-04: USE ø 5 × 20mm Fuse

Panel cutout

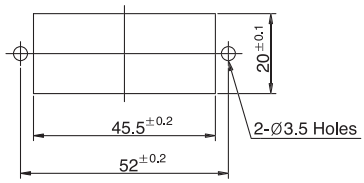

Electrical specifications

- Power rating: 6A, 250V AC
- Withstanding voltage: 1 min. at 1,000V AC
- Insulation Resistance: 100 Mohms at 500V DC
- Contact Resistance: 30 mohms, max.
- No. of poles: 2 + ground
- Voltage selector: 100V-120V-220V-240V

Mechanical specifications

- Insulation material: PBT with 15% glassfiber
- Operating temperature: -30° C ~ 80° C
- Fuse size: ø 6.35 × 31.8mm
  : ø 5 × 20mm
- UL, Approved

Belton Engineering Co., Ltd.

Unit 1208, Daerung Techno town 8,
481-11, Gasan-Dong,
Geumcheon-Gu, Seoul, Korea

TEL : (822)2163-0060~0065
FAX : (822)2163-0066
E-mail : belton@unitel.co.kr

AC inlet with 20mm Fuse Holder + 4 steps voltage selector function

Features

- Socket is made of glassfiber reinforced thermoplastic material
- Constructed by 1 pole Fuse Holder and 4 steps voltage selector(100, 120, 220, 240V)

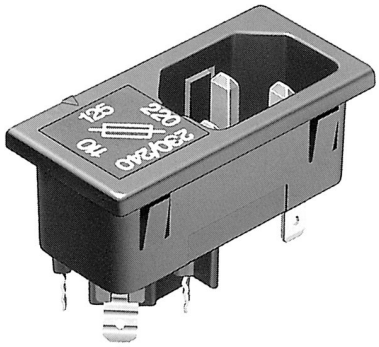

Applications

- Applicable to all types of electronic equipments such as measuring instruments, electronic musical instruments and OA equipments

Dimensions

BACI-07-□

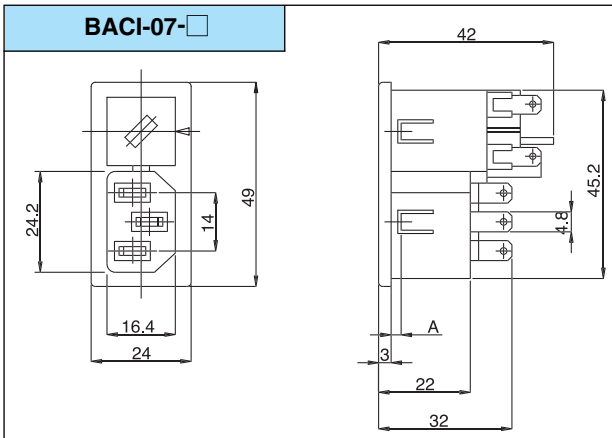

BACI-07-1

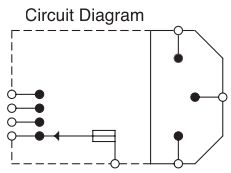

• BACI-07-1: USE ø 5 × 20mm Fuse

BACI-07-2

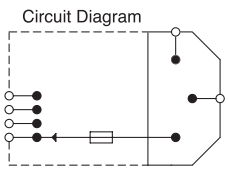

• BACI-07-2: USE ø 5 × 20mm Fuse

Panel cutout

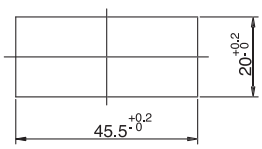

Electrical specifications

- Power rating: 6A, 250V AC
- Withstanding voltage: 1 min. at 1,000V AC
- Insulation Resistance: 100 Mohms at 500V DC
- Contact Resistance: 30 mohms, max.
- No. of poles: 2 + ground
- Voltage selector: 100V-120V-220V-240V

Mechanical specifications

- Insulation material: PBT with 15% glassfiber
- Operating temperature: -30° C ~ 80° C
- Fuse size: ø 5 × 20mm

Belton Engineering Co., Ltd.

Unit 1208, Daerung Techno town 8,
481-11, Gasan-Dong,
Geumcheon-Gu, Seoul, Korea

TEL : (822)2163-0060~0065
FAX : (822)2163-0066
E-mail : belton@unitel.co.kr

REVERBERATION UNIT
ROTARY SWITCH
ENCODER SWITCH
VACUUM TUBE SOCKET & SHIELD
POWER ENTRY
JACK & XLR SOCKET

AC inlet with 2 line Fuse Holder + voltage selector

Features

- Constructed by 2 poles fuse holder (6.3 × 32mm) and multi-step voltage selector
- Enclosing material is made of glassfiber filled thermoplastics

Applications

- Applicable to all type of electronic equipments such as measuring instruments, electronic musical instruments and OA equipments.

Dimensions

BACI-05

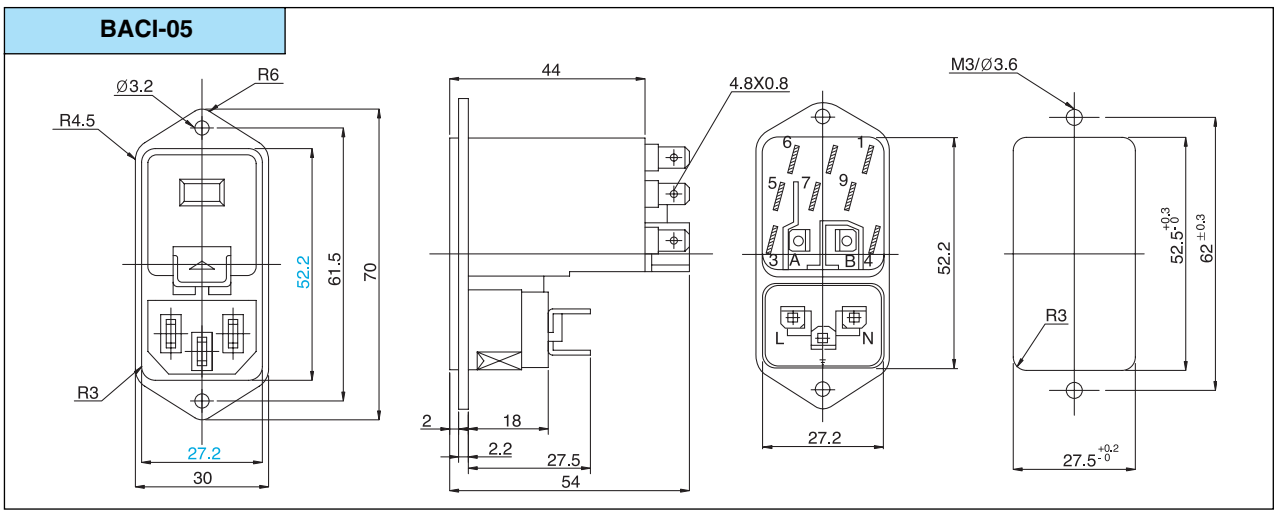

BACI-05 Series

CODE: BACI — 05 — ☐ — ☐ — ☐

TERMINAL	CONNECTION		VOLTAGE SELECTOR CIRCUITS			FUSE USAGE
A	B	C	1		2	A
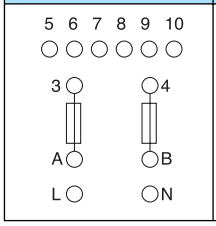	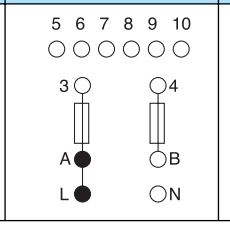	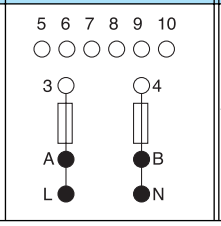	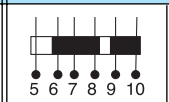	110	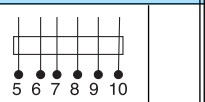	
			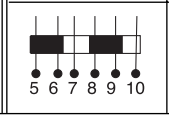	220	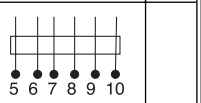	B
						C

●: LIVE
○: DUMMY

Electrical specifications

- Power rating: 6A. 250V AC
- Withstanding voltage: 1 min. at 1,000V AC
- Insulation Resistance: 100 Mohms at 500V DC
- Contact Resistance: 30 mohms, max.
- No. of poles: 2 + ground
- Voltage selector: 100V-120V-220V-240V

Mechanical specifications

- Insulation material: PBT with 15% glassfiber
- Operating temperature: -30° C ~ 80° C
- Fuse size: 6.35 × 31.8mm
- UL, CSA, VDE. Approved

Belton Engineering Co., Ltd.

Unit 1208, Daerung Techno town 8,
481-11, Gasan-Dong,
Geumcheon-Gu, Seoul, Korea

TEL : (822)2163-0060~0065
FAX : (822)2163-0066
E-mail : belton@unitel.co.kr

Remarkable AC INLET design with 5 * 20mm fuse holder on the standard AC INLET construction

Features

- Use the same size mounting hole of the standard inlet
- Suitable construction for easy change fuse from outside
- Housing is made of glassfiber reinforced thermoplastic material

PATENT

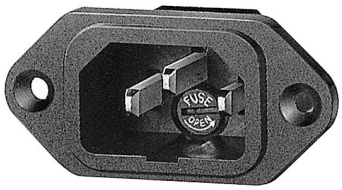

Applications

- Applicable to all types of electronic equipments such as measuring instruments, electronic musical instruments and OA equipments.

Dimensions

BACI-06-□

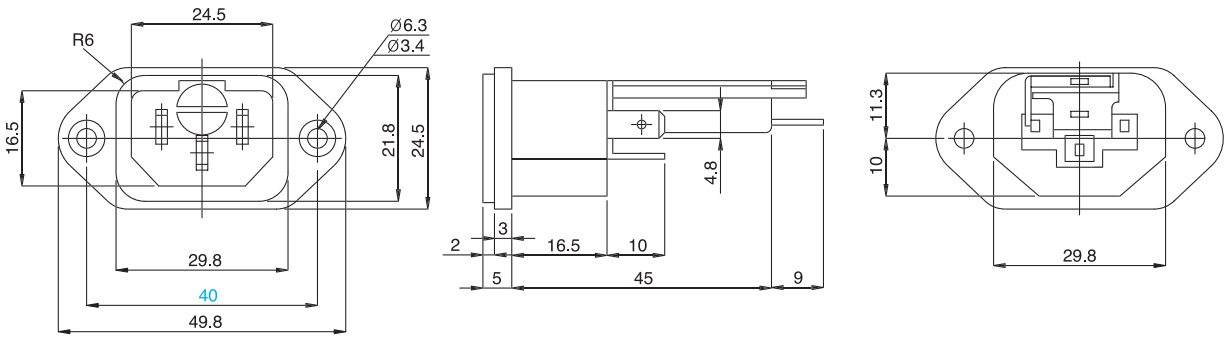

Circuit diagram

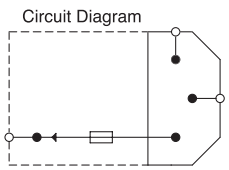

Panel cutout

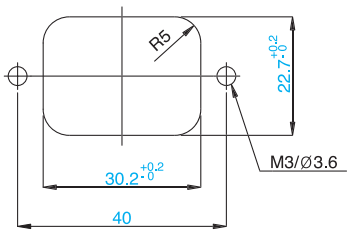

Electrical specifications

- Power rating: 6A, 250V AC
- Withstanding voltage: 1 min. at 1,000V AC
- Insulation Resistance: 100 Mohms at 500V DC
- Contact Resistance: 30 mohms, max.
- No. of poles: 2 + ground

Mechanical specifications

- Insulation material: PBT with 15% glassfiber
- Operating temperature: -30°C ~ 80°C
- Fuse size: ø 5 × 20mm Only
- UL, CSA, TÜV Approved

Belton Engineering Co., Ltd.

Unit 1208, Daerung Techno town 8,
481-11, Gasan-Dong,
Geumcheon-Gu, Seoul, Korea

TEL : (822)2163-0060~0065
FAX : (822)2163-0066
E-mail : belton@unitel.co.kr

JACK & XLR SOCKET

- 1/4” Phone jack ..... 65~68
- XLR Socket ..... 69~76
- XLM+1/4” Phone jack ..... 77~84
- Speaker connector ..... 85~86

1/4″ PHONE JACK

(EPJ SERIES)

CAT. NO.: EPJ-1

Protecting contact corrosion, dust and flux spotted

Features

- Glossy plastic Nut
- Good Insulation with glassfiber
- Enclosing and Applying contact oil to the contact
- Bushing mouth piece can be supplied by option

PATENT

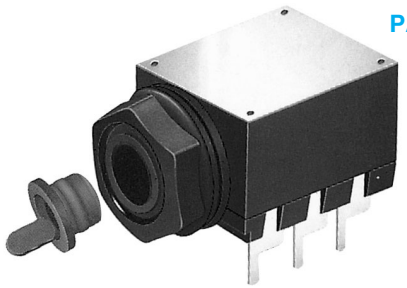

Applications

- Applicable to all types of electronic music instruments like as mixing console, graphic equalizer and stereo amplifier etc.

Dimensions

EPJ-BBB-P (6.5 or 8)

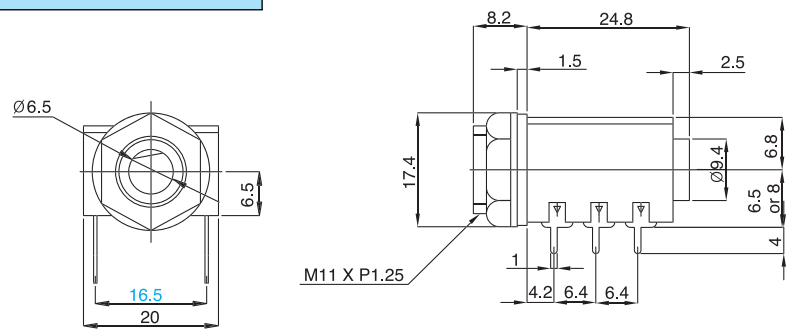

P.C.B Mounting Hole

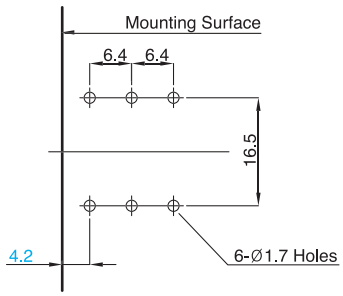

EPJ-BBB-P (10 or 12.5)

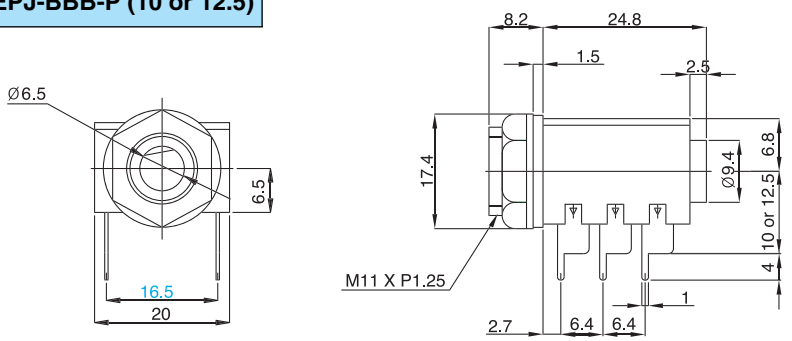

P.C.B Mounting Hole

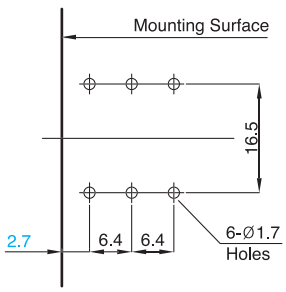

EPJ-BBB-S

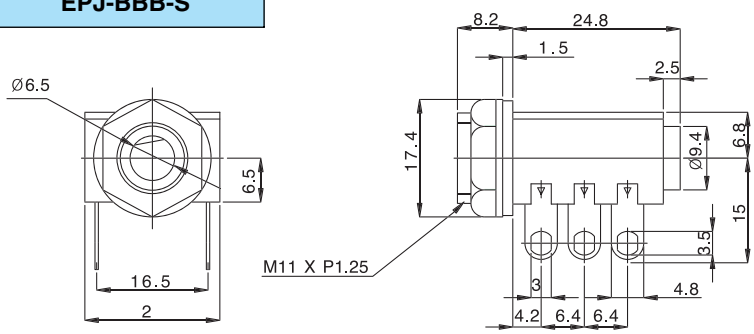

General Specification

- Life: 10,000 Cycles Min. (Insertion / Withdrawal)
- Insertion / Withdrawal Force: 0.1~0.8kg · f/cm
- Contact Resistance: 20 mohms(Max.)
- Insulation Resistance: Over 100 Mohms
- Dielectric Withstanding Voltage: 500V AC
- Contact Rating: 25A. 48V DC

Belton Engineering Co., Ltd.

Unit 1208, Daerung Techno town 8,
481-11, Gasan-Dong,
Geumcheon-Gu, Seoul, Korea

TEL : (822)2163-0060~0065
FAX : (822)2163-0066
E-mail : belton@unitel.co.kr

REVERBERATION UNIT
ROTARY SWITCH
ENCODER SWITCH
VACUUM TUBE SOCKET & SHIELD
POWER ENTRY
JACK & XLR SOCKET

Slim & Chassis grounding type Phone Jack

Features

- Wonderful Insulation with glass filled thermoplastics
- Nickel silver contact material
- Special Metal Nut are available by option
- Chassis Ground construction by requirements

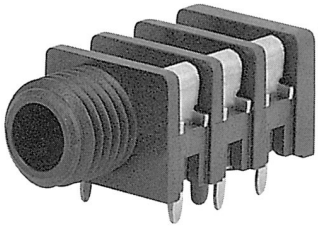

Applications

- Applicable to all types of electronic music instruments like as mixing console, graphic equalizer and stereo amplifier etc.

Dimensions

NPJ-BBB-P (6.5 or 8)

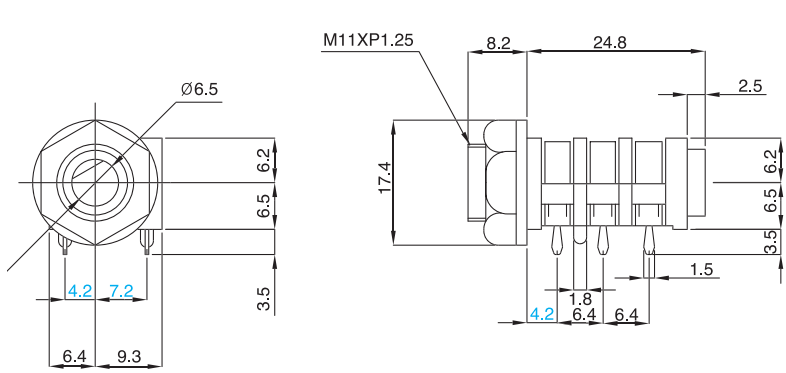

P.C.B Mounting Hole

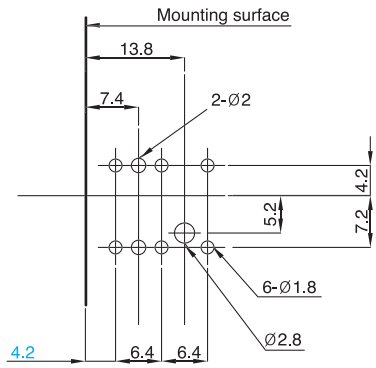

General Specification

- Life: 10,000 Cycles Min.
- Insertion / Withdrawal Force: 0.1~ 0.8kg · f/cm
- Contact Resistance: 20 mohms (Max.)
- Insulation Resistance: Over 100 Mohms
- Dielectric Withstanding Voltage: 500V AC
- Contact Rating: 25A, 48V DC

Belton Engineering Co., Ltd.

Unit 1208, Daerung Techno town 8,
481-11, Gasan-Dong,
Geumcheon-Gu, Seoul, Korea

TEL : (822)2163-0060~0065
FAX : (822)2163-0066
E-mail : belton@unitel.co.kr

1/4″ PHONE JACK

(BPJ SERIES)

CAT.NO.: BPJ-1

Shining & Glossy metal nut type

Features

- Good contact point by using nickel silver contact material
- Insulated material is thermoplastics
- Soldering and P.C. Board mounting are available

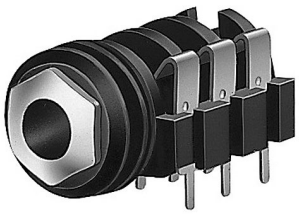

Applications

- Applicable to all types of electronic music instruments like as mixing console, graphic equalizer and stereo amplifier etc.

Dimensions

BPJ-BBB-P (6.5) or (8)

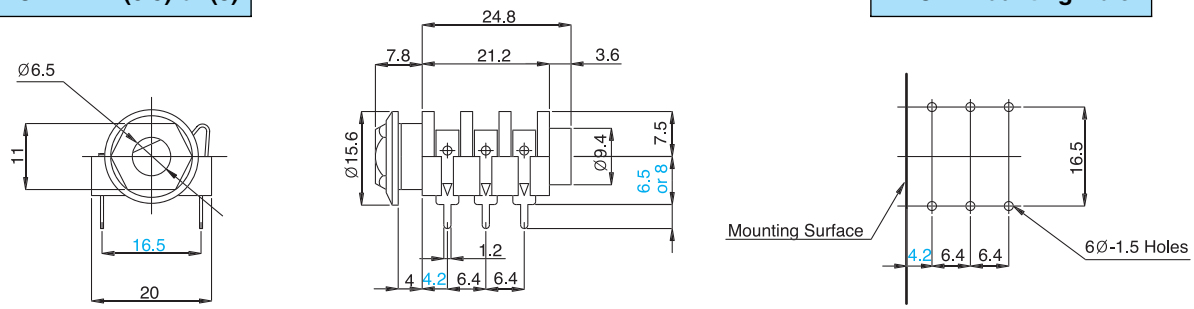

BPJ-BBB-P (12.5)

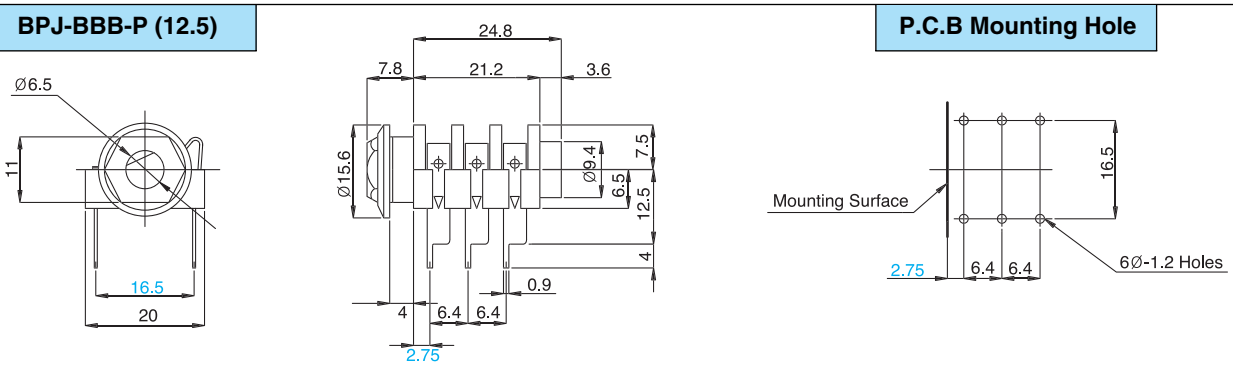

BPJ-BBB-S

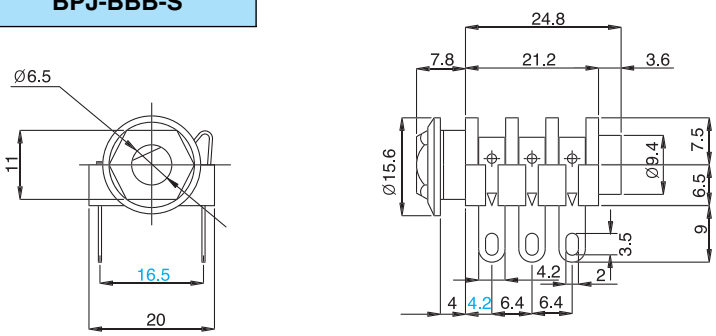

General Specification

- Life: 10,000 Cycles Min (Insertion /Withdrawal)
- Insertion / Withdrawal Force: 0.1~ 0.8kg · f/cm
- Contact Resistance: 20 mohms(Max.)
- Insulation Resistance: Over 100 Mohms
- Dielectric Withstanding Voltage: 500V AC
- Contact Rating: 25A, 48V DC

Belton Engineering Co., Ltd.

Unit 1208, Daerung Techno town 8,
481-11, Gasan-Dong,
Geumcheon-Gu, Seoul, Korea

TEL : (822)2163-0060~0065
FAX : (822)2163-0066
E-mail : belton@unitel.co.kr

REVERBERATION UNIT
ROTARY SWITCH
ENCODER SWITCH
VACUUM TUBE SOCKET & SHIELD
POWER ENTRY
JACK & XLR SOCKET

Economical Enclosed Phone Jack

Features

- Wiring and P.C. Board mounting in common
- Good insulation with glass filled thermoplastics
- Fine forming and treatment for safety contact

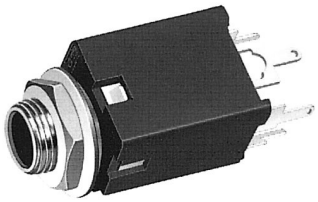

Applications

- Applicable to all types of electronic music instruments like as mixing console, graphic equalizer and stereo amplifier etc.

Dimensions

VPJ-0 6

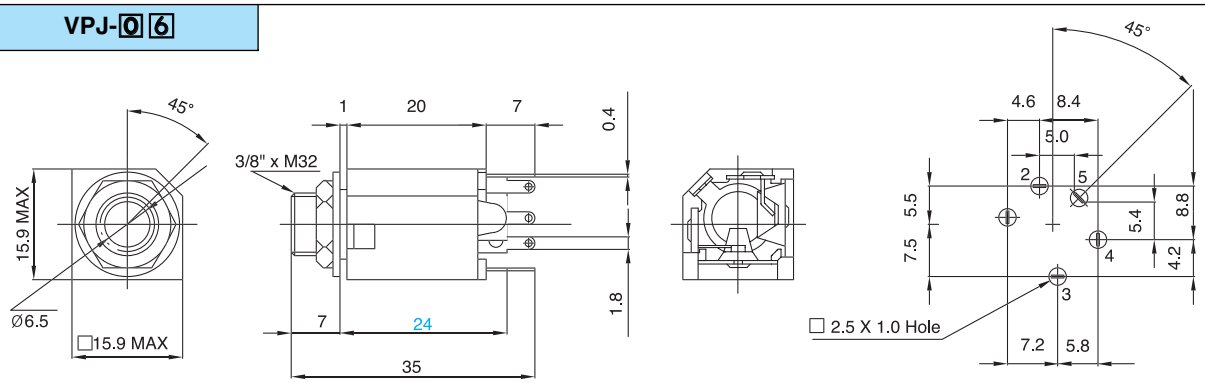

P.C.B Mounting Hole

VPJ Series

MODEL NO.	VPJ-06	VPJ-05	VPJ04	VPJ03	VPJ02	VPJ01
SCHEMATIC	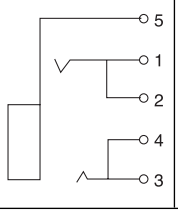	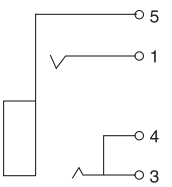	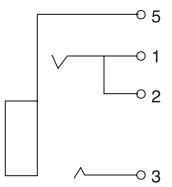	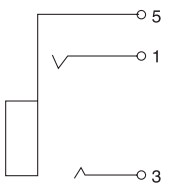	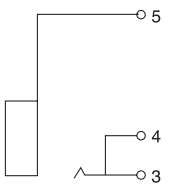	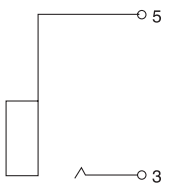

General Specification

- Electrical Life: 10,000 Cycles Min. (Insertion / Withdrawal)
- Insertion / withdrawal Forces: 0.1~0.8kg · f/cm
- Contact Resistance: 20 mohms(Max.)
- Insulation Resistace: Over 100 Mohms
- Dielectric withstanding Voltage: 500V AC
- Contact Rating: 25A, 48V DC

Belton Engineering Co., Ltd.

Unit 1208, Daerung Techno town 8,
481-11, Gasan-Dong,
Geumcheon-Gu, Seoul, Korea

TEL : (822)2163-0060~0065
FAX : (822)2163-0066
E-mail : belton@unitel.co.kr

X L R RECEPTACLES(Male)

(EPJ SERIES)

CAT.NO.: BXM - 1

Good contact connector with economical type

Features

- 3 circuits male and female type
- Housing is made of thermoplastic material with glassfiber
- Vertical and horizontal P.C. Board mounting are available

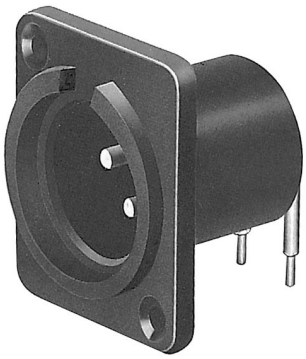

Applications

- Applicable to all types of electronic music instruments such as mixing console, graphic equalizer and stereo amplifier etc.

Dimensions

XLM-3SV

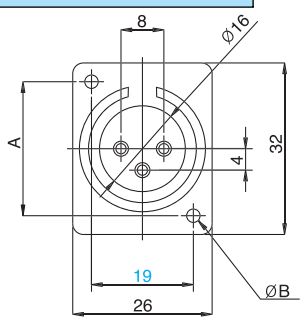

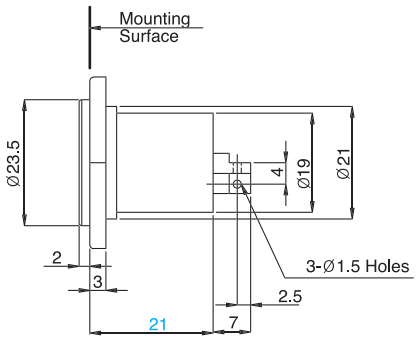

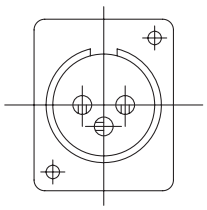

PART	A(mm)	B(ø)
#1	24.5	2.5
#2	24.5	3.5
#3	25	2.5
#4	25	3.5

XLM-3PH

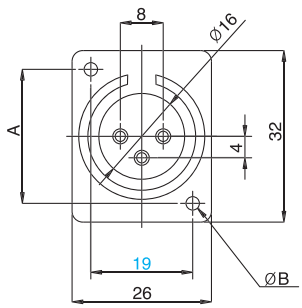

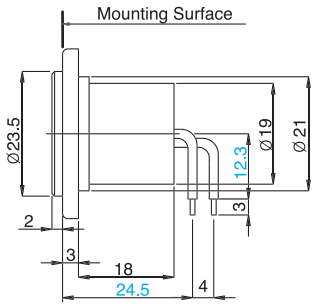

P.C.B Mounting Hole

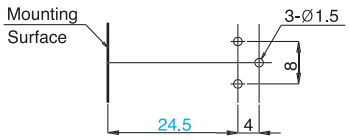

PART	A(mm)	B(ø)
#1	24.5	2.5
#2	24.5	3.5
#3	25	2.5
#4	25	3.5

XLM-3PV

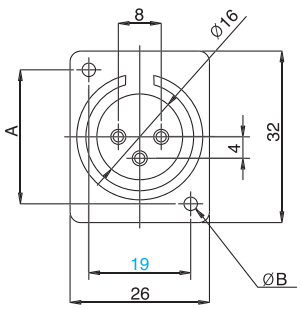

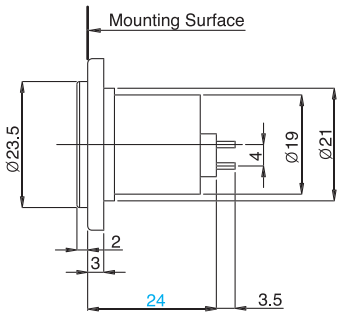

P.C.B Mounting Hole

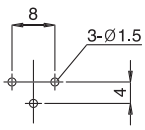

PART	A(mm)	B(ø)
#1	24.5	2.5
#2	24.5	3.5
#3	25	2.5
#4	25	3.5

Belton Engineering Co., Ltd.

Unit 1208, Daerung Techno town 8,
481-11, Gasan-Dong,
Geumcheon-Gu, Seoul, Korea

TEL : (822)2163-0060~0065
FAX : (822)2163-0066
E-mail : belton@unitel.co.kr

REVERBERATION UNIT
ROTARY SWITCH
ENCODER SWITCH
VACUUM TUBE SOCKET & SHIELD
POWER ENTRY
JACK & XLR SOCKET

Good contact connector with economical type (90° turned mount)

Features

- 3 circuits male and female type
- Housing is made of thermoplastic material with glassfiber
- Vertical and horizontal P.C. Board mounting are available

Applications

- Applicable to all types of electronic music instruments such as mixing console, graphic equalizer and stereo amplifier etc.

Dimensions

XLM-3SV-7

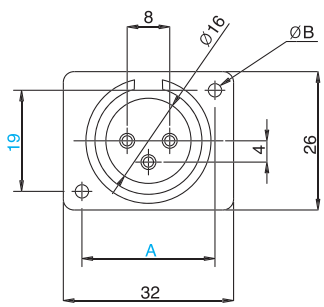

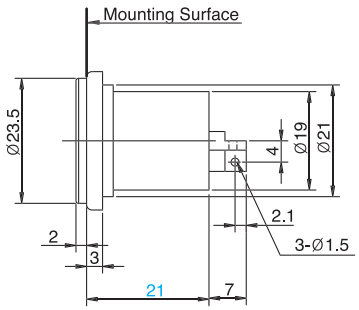

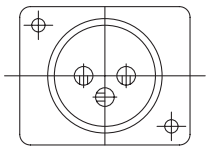

PART	A(mm)	B(ø)
#1	24.5	2.5
#2	24.5	3.5
#3	25	2.5
#4	25	3.5

XLM-3PH-7

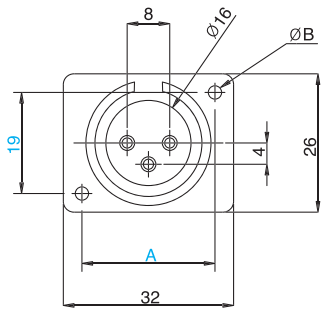

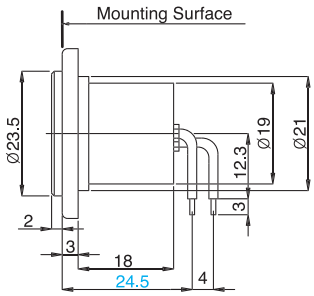

P.C.B Mounting Hole

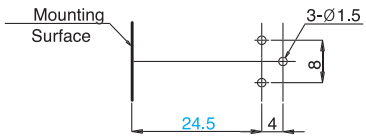

PART	A(mm)	B(ø)
#1	24.5	2.5
#2	24.5	3.5
#3	25	2.5
#4	25	3.5

XLM-3PV-7

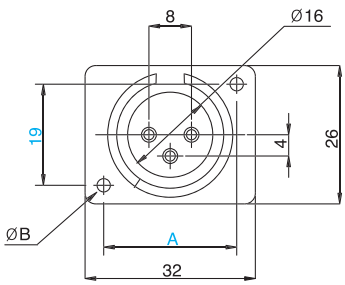

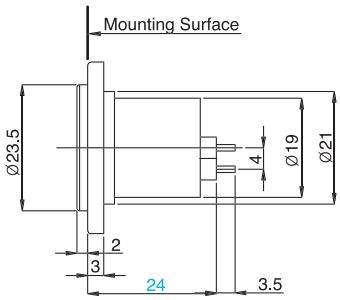

P.C.B Mounting Hole

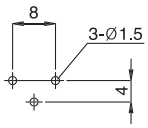

PART	A(mm)	B(ø)
#1	24.5	2.5
#2	24.5	3.5
#3	25	2.5
#4	25	3.5

Belton Engineering Co., Ltd.

Unit 1208, Daerung Techno town 8,
481-11, Gasan-Dong,
Geumcheon-Gu, Seoul, Korea

TEL : (822)2163-0060~0065
FAX : (822)2163-0066
E-mail : belton@unitel.co.kr

X L R RECEPTACLES(Male)

(XLM SERIES)

CAT.NO.: BXM - 3

(FOR EXAMPLE) XLM — 3SV — 3

MODEL	TERMINAL SHAPE	SOCKET MOUNTING	REMARK
XLM-3SV	Soldering	Hole	· Refer to the DRG on the page 68 · Mounting hole sizes are shown at page 68
XLM-3SV-3	Soldering	w / Boss	· Shape is same as XLM-3SV but only have mounting boss which can be mounted directly without rear mounting chassis
XLM-3SV-5	Soldering	w / Boss	· 90° Angle turned socket mounting type, refer to page 69
XLM-3SV-7	Soldering	Hole	· 90° Angle turned socket mounting type, refer to page 69
XLM-3PV	P.C.B.	Hole	· Vertical P.C Board mounting · See the DRG. on the page 68
XLM-3PV-3	P.C.B.	w / Boss	· Vertical P.C Board mounting refer to the XLM-3SV-3 remark
XLM-3PV-5	P.C.B.	w / Boss	· 90° Angle turned socket mounting type, refer to page 69
XLM-3PV-7	P.C.B.	Hole	· 90° Angle turned socket mounting type, refer to page 69
XLM-3PH	P.C.B.	Hole	· Horizontal P.C Board mounting · See the DRG on the page 68
XLM-3PH-3	P.C.B.	w / Boss	· Horizontal P.C Board mounting · See the DRG on the page 68
XLM-3PH-5	P.C.B.	w / Boss	· 90° Angle turned socket and P.C Board mounting type, refer to page 69
XLM-3PH-7	P.C.B.	Hole	· 90° Angle turned socket and P.C Board mounting type, refer to page 69

*1. The hole sizes of socket mounting are shown at the DRG of page 68 and 69
2. The boss size of socket mounting is 2.5 inner hole with 4.5 out diameter × 5mm length

General Specification

- Life: 10,000 Cycles Min. (Insertion / Withdrawal)
- Insertion / Withdrawal Force: 3~5 kg · f/cm
- Contact Resistance: 20 mohms(Max.)
- Insulation Resistance: Over 100 Mohms
- Dielectric Withstanding Voltage: 500V AC
- Contact Rating: 25A, 48V DC

Belton Engineering Co., Ltd.
Unit 1208, Daerung Techno town 8, 481-11, Gasan-Dong, Geumcheon-Gu, Seoul, Korea
TEL : (822)2163-0060~0065
FAX : (822)2163-0066
E-mail : belton@unitel.co.kr

REVERBERATION UNIT
ROTARY SWITCH
ENCODER SWITCH
VACUUM TUBE SOCKET & SHIELD
POWER ENTRY
JACK & XLR SOCKET

Easy auto-soldering, specially for horizontal P.C. Board mounting type

Features

- Reduced and compact size (mounting pitch: 20mm)
- Housing is made of thermoplastic material with Glassfiber
- Vertical and horizontal P.C. Board mounting are available

Applications

- Applicable to all types of electronic music instruments such as mixing console, graphic equalizer and stereo amplifier etc.

Dimensions

XLMN-3SV

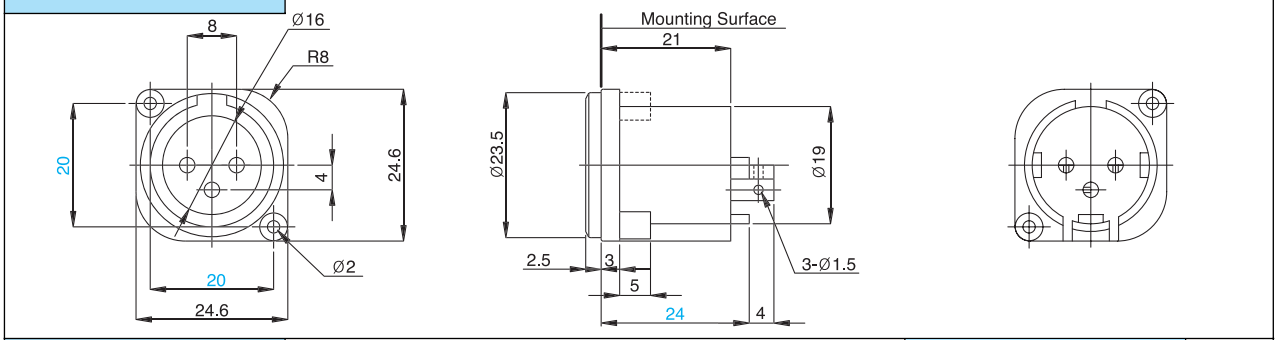

XLMN-3PH

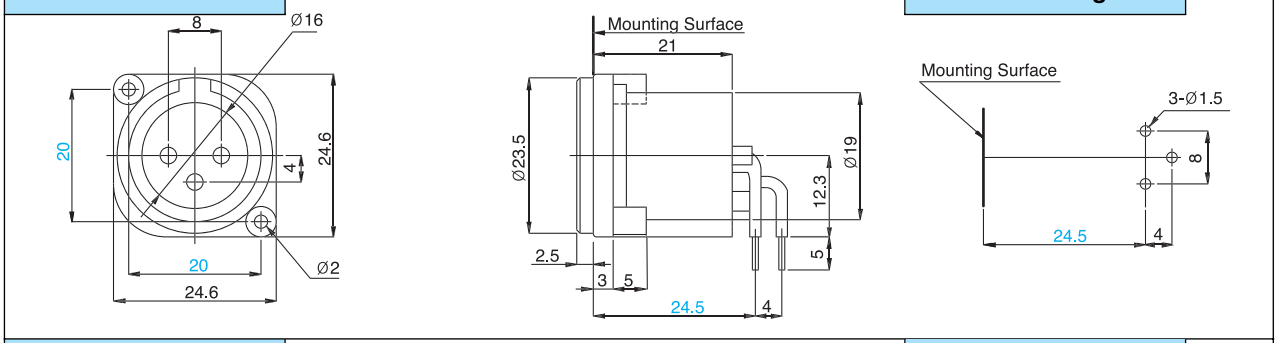

XLMN-3PV

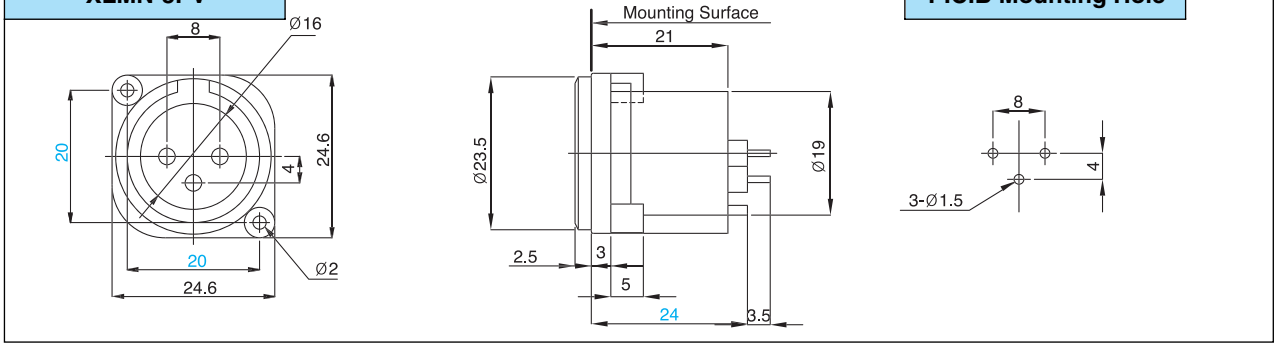

Belton Engineering Co., Ltd.

Unit 1208, Daerung Techno town 8,
481-11, Gasan-Dong,
Geumcheon-Gu, Seoul, Korea

TEL : (822)2163-0060~0065
FAX : (822)2163-0066
E-mail : belton@unitel.co.kr

X L R RECEPTACLES(Female)

(XLF SERIES)

CAT.NO.: BXF - 1

Good contact connector with economical type

Features

- 3 circuits male and female type
- Housing is made of thermoplastic material with Glass fiber
- Vertical and horizontal P.C. Board mounting are available

Applications

- Applicable to all types of electronic music instruments like as mixing console, graphic equalizer and stereo amplifier etc.

Dimensions

XLF-3SP-2

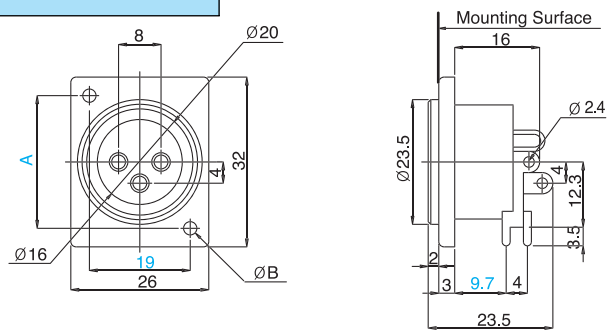

P.C.B Mounting Hole

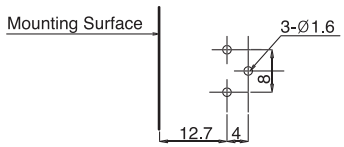

PART	A(mm)	B(ø)
#1	24.5	2.5
#2	24.5	3.5
#3	25	2.5
#4	25	3.5

XLF-3PH

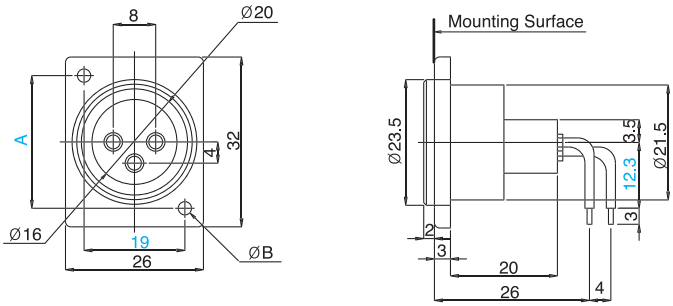

P.C.B Mounting Hole

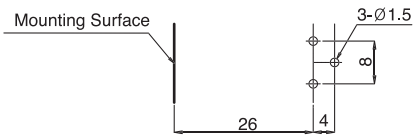

PART	A(mm)	B(ø)
#1	24.5	2.5
#2	24.5	3.5
#3	25	2.5
#4	25	3.5

XLF-3PV

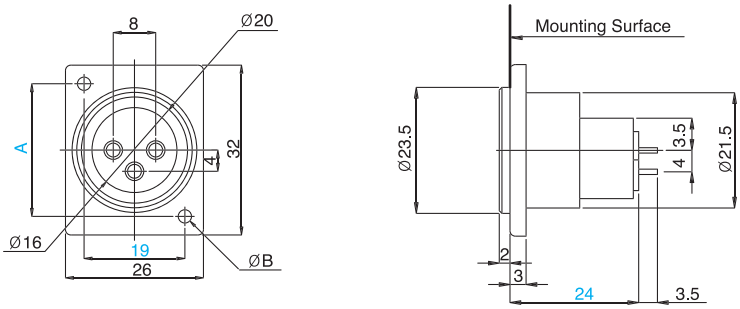

P.C.B Mounting Hole

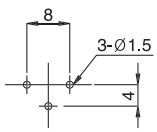

PART	A(mm)	B(ø)
#1	24.5	2.5
#2	24.5	3.5
#3	25	2.5
#4	25	3.5

Belton Engineering Co., Ltd.

Unit 1208, Daerung Techno town 8,
481-11, Gasan-Dong,
Geumcheon-Gu, Seoul, Korea

TEL : (822)2163-0060~0065
FAX : (822)2163-0066
E-mail : belton@unitel.co.kr

REVERBERATION UNIT
ROTARY SWITCH
ENCODER SWITCH
VACUUM TUBE SOCKET & SHIELD
POWER ENTRY
JACK & XLR SOCKET

Good contact connector with economical type (90° turned mount)

Features

- 3 circuits male and female type
- Housing is made of thermoplastic material with glassfiber
- Vertical and horizontal P.C. Board mounting are available

Applications

- Applicable to all types of electronic music instruments like as mixing console, graphic equalizer and stereo am plifier etc.

Dimensions

XLF-3SP-5

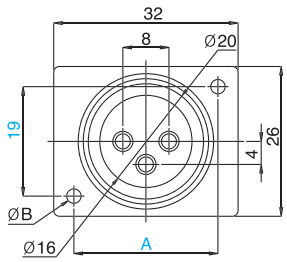

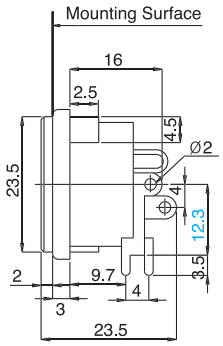

P.C.B Mounting Hole

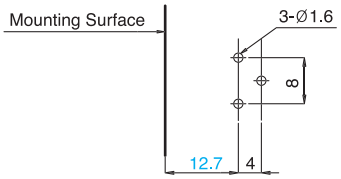

PART	A(mm)	B(ø)
#1	24.5	2.5
#2	24.5	3.5
#3	25	2.5
#4	25	3.5

XLF-3SP-7

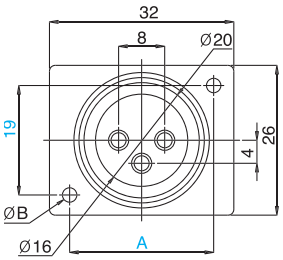

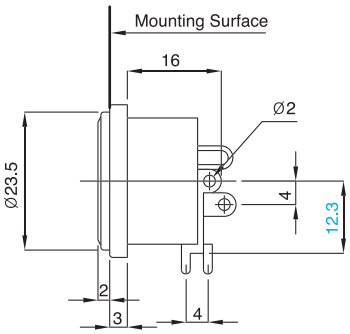

P.C.B Mounting Hole

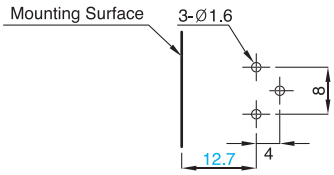

PART	A(mm)	B(ø)
#1	24.5	2.5
#2	24.5	3.5
#3	25	2.5
#4	25	3.5

General Specification

- Life: 10,000 Cycles Min.
  (Insertion / Withdrawal)
- Insertion / Withdrawal Force: 3~5 kg · f/cm
- Contact Resistance: 20 mohms(Max.)
- Insulation Resistance: Over 100 Mohms
- Dielectric Withstanding Voltage: 500V AC
- Contact Rating: 25A, 48V DC

Belton Engineering Co., Ltd.

Unit 1208, Daerung Techno town 8,
481-11, Gasan-Dong,
Geumcheon-Gu, Seoul, Korea

TEL : (822)2163-0060~0065
FAX : (822)2163-0066
E-mail : belton@unitel.co.kr

X L R RECEPTACLES(Female)

(XLF SERIES)

CAT.NO.: BXF - 3

(FOR EXAMPLE) XLF — 3SP — 1

MODEL	TERMINAL SHAPE	SOCKET MOUNTING	LOCKING REINFORCED PIN	REMARK
XLF-3SP-1	Soldering and P.C.B. in common	Hole	No	Refer to the DRG. on the page 72
XLF-3SP-2	Soldering and P.C.B. in common	Hole	Yes	See page 72
XLF-3SP-3	Soldering and P.C.B. in common	w / Boss	No	Refer to the below *1 and 2
XLF-3SP-4	Soldering and P.C.B. in common	w / Boss	Yes	Refer to the below *1 and 2
XLF-3SP-5	Soldering and P.C.B. in common	w / Boss	No	90° Angle turned socket mounting type (p73)
XLF-3SP-6	Soldering and P.C.B. in common	w / Boss	Yes	90° Angle turned socket mounting type (p73)
XLF-3SP-7	Soldering and P.C.B. in common	Hole	No	90° Angle turned socket mounting type(p73)
XLF-3SP-8	Soldering and P.C.B. in common	Hole	Yes	90° Angle turned socket mounting type (p73)
XLF-3PV	P.C.B.	Hole	No	Vertical P.C.B Mounting
XLF-3PV-3	P.C.B.	w / Boss	No	Vertical P.C.B Mounting
XLF-3PH	P.C.B.	Hole	No	Horizontal P.C.B Mounting
XLF-3PH-3	P.C.B.	w / Boss	No	Horizontal P.C.B Mounting *1 and 2

*1. The hole sizes of socket mounting are shown at the DRG of page 72 and 73
2. The boss size of socket mounting is 2.5 inner hole with 4.5 out diameter × 5mm length

General Specification

- Life: 10,000 Cycles Min. (Insertion / Withdrawal)
- Insertion / Withdrawal Force: 3~5kg · f/cm
- Contact Resistance: 20 mohms(Max.)
- Insulation Resistance: Over 100 Mohms
- Dielectric Withstanding Voltage: 500V AC
- Contact Rating: 25A, 48V DC

Belton Engineering Co., Ltd.
Unit 1208, Daerung Techno town 8, 481-11, Gasan-Dong, Geumcheon-Gu, Seoul, Korea
TEL : (822)2163-0060~0065
FAX : (822)2163-0066
E-mail : belton@unitel.co.kr

X L R RECEPTACLES(Female)

(XLFN SERIES)

CAT. NO.: XLFN-1

Easy auto-soldering, specially for horizontal P.C Board mounting type

Features

- Reduced and compact size (mounting pitch: 20mm)
- Housing is made of thermoplastic material with glassfiber
- Vertical and horizontal P.C Board mounting are available

Applications

- Applicable to all types of electronic music instruments like as mixing console, graphic equalizer and stereo amplifier etc.

Dimensions

XLFN-3SV

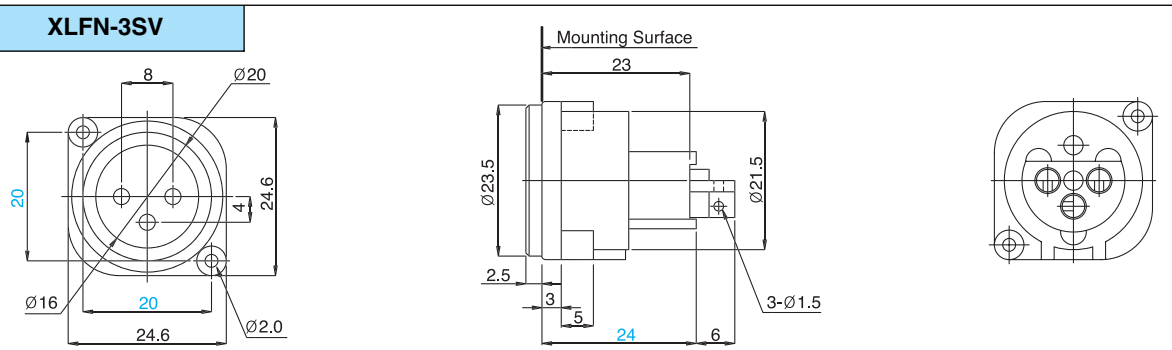

XLFN-3PH

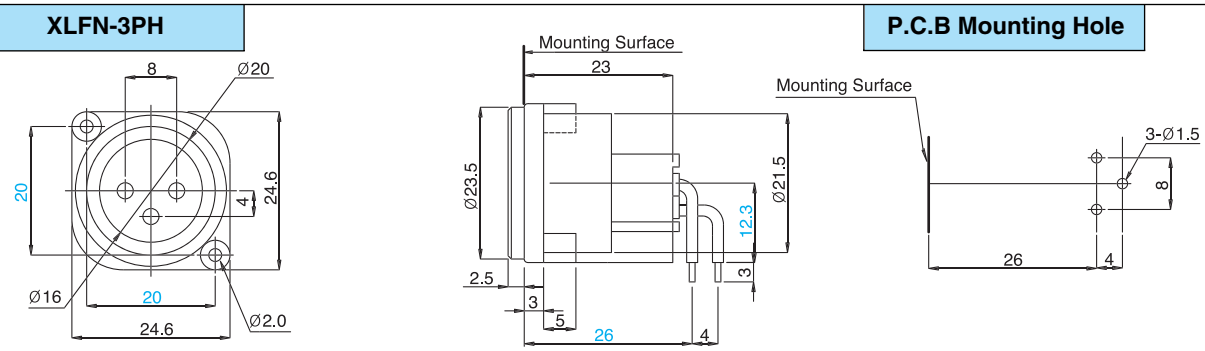

XLFN-3PV

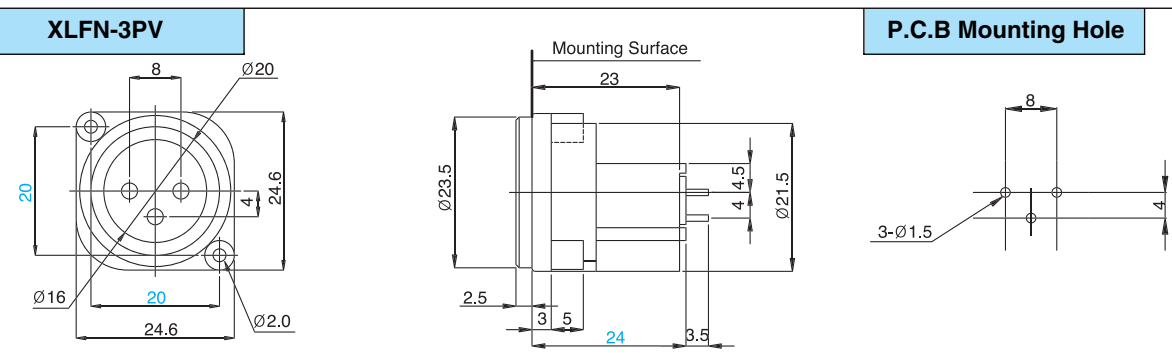

Belton Engineering Co., Ltd.

Unit 1208, Daerung Techno town 8,
481-11, Gasan-Dong,
Geumcheon-Gu, Seoul, Korea

TEL : (822)2163-0060~0065
FAX : (822)2163-0066
E-mail : belton@unitel.co.kr

Male+Female combination XLR receptacle block with ground terminal

Features

NEW

- 3 circuits male and female combination with ground terminal
- Housing is made of thermoplastic material with glassfiber
- Vertical and horizontal P.C. Board mounting are available
- Block construction improve assembly process with reducing mounting operation

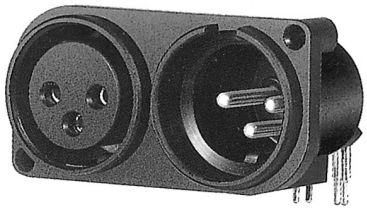

Applications

- Applicable to all types of electronic music instruments like as mixing console, graphic equalizer and stereo amplifier and digital equipments

Dimensions

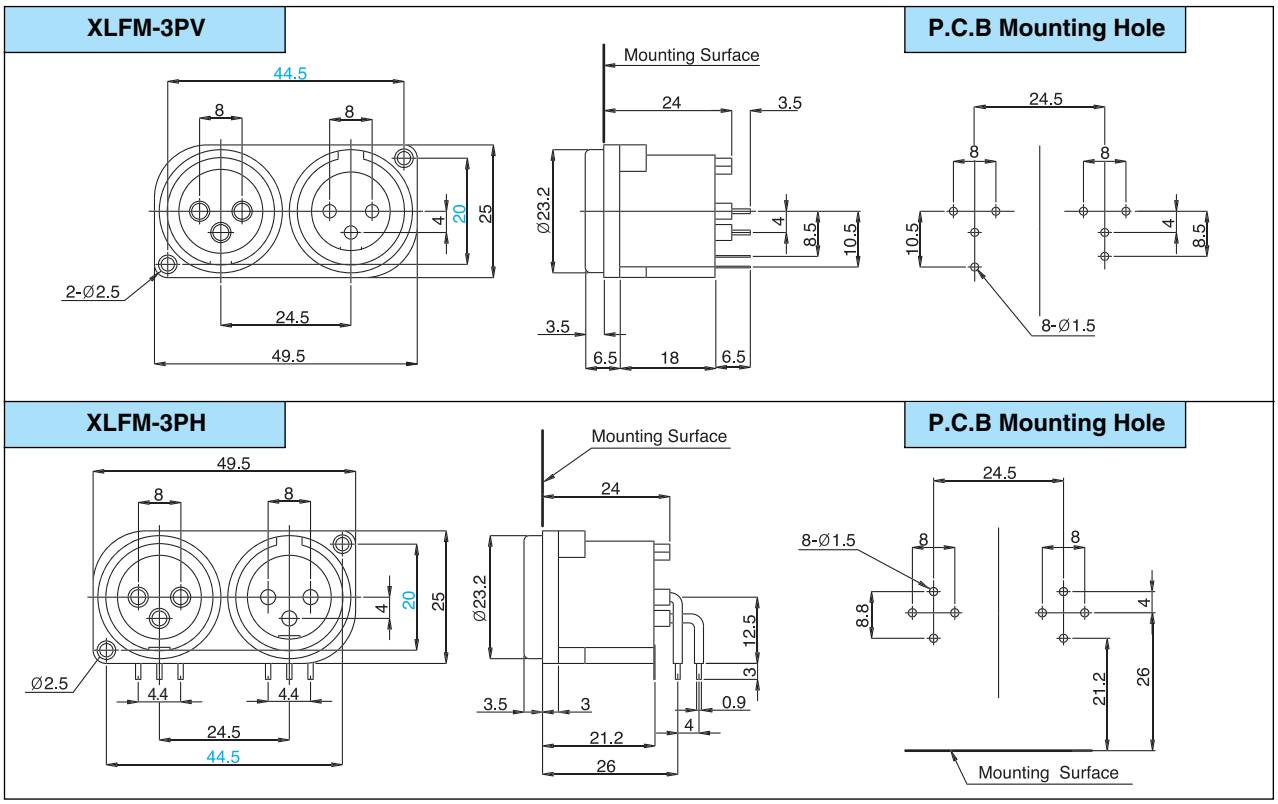

General Specification

- Electrical Life: 10,000 Cycles Min. (Insertion/Withdrawal)
- Insertion / Withedrawal Force: 3~5 kg · f/cm
- Contact Resistance: 20 mohms(Max.)
- Insulation Resistance: Over 100 Mohms, 500V DC
- Dielectric Withestanding Voltage: 1min. at 500V AC
- Contact Rating: 25A, 48V DC

Belton Engineering Co., Ltd.

Unit 1208, Daerung Techno town 8,
481-11, Gasan-Dong,
Geumcheon-Gu, Seoul, Korea

TEL : (822)2163-0060~0065
FAX : (822)2163-0066
E-mail : belton@unitel.co.kr

REVERBERATION UNIT
ROTARY SWITCH
ENCODER SWITCH
VACUUM TUBE SOCKET & SHIELD
POWER ENTRY
JACK & XLR SOCKET

Combination jack block with 3 poles XLR male socket + double 1/4″ phone jacks

Features

- Fine formed and technical treatment for safty contact with the block construction of 3 ploes XLR male socket + double 1/4″ phone jack
- Block construction improve assembly process by reducing the screw mounting operation
- Good insulation with glass filled thermoplastics
- Space and labor saving design

PATENT

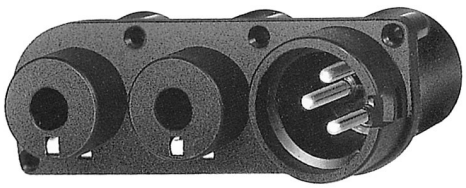

Applications

- Applicable to all types of electronic music instruments like as mixing console, graphic equalizer and stereo amplifier etc.

Dimensions

XLM2PV-□□-□□

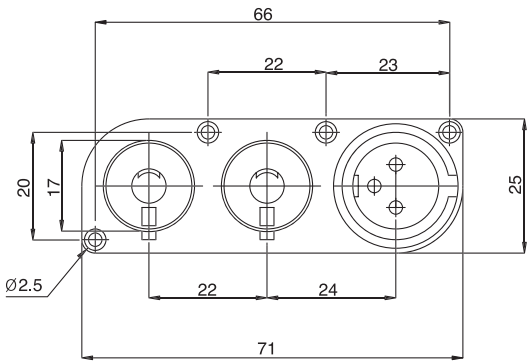

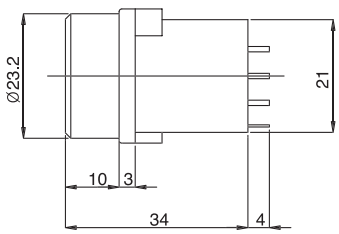

Bottom View

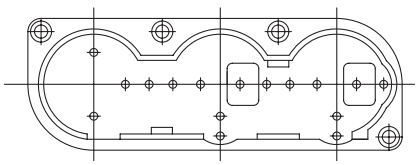

P.C.B Mounting Hole

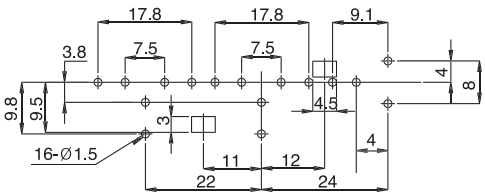

Belton Engineering Co., Ltd.

Unit 1208, Daerung Techno town 8,
481-11, Gasan-Dong,
Geumcheon-Gu, Seoul, Korea

TEL : (822)2163-0060~0065
FAX : (822)2163-0066
E-mail : belton@unitel.co.kr

COMBINATION JACK

(XLM2PV SERIES)

CAT. NO.: XLM2PV-2

Specifications of Phone jack series

MODEL NO	07	06	05	04	03	02	01
SCHEMATIC CIRCUIT WITHOUT XLR SOCKET CIRCUITS	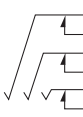				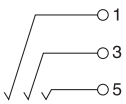	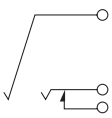	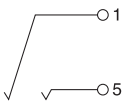

General Specifications

- Electrical life: 10,000 cycles(min)
- Contact Resistance: 20 mohms(max)
- Contact Rating: 10A, 48V DC
- Capacitance: XLR≤3pF, JACK≤5pF
- Insulation Resistance: Over 100 Mohms, 500V DC
- Dielectric Withstanding Voltage: 1min. at 500V AC
- Insertion/Withdrawal Force: 3~5 kgf · cm
- Operationg Temperature: -20° ~ +60° C

Suggested ordering code

Ex.

XLM2PV	-	0	3	-	0	3

Series

2nd Phone Jack

MODEL	Refer to specification						
Code	07	06	05	04	03	02	01

1st Phone Jack

MODEL	Refer to specification						
Code	07	06	05	04	03	02	01

Belton Engineering Co., Ltd.
Unit 1208, Daerung Techno town 8,
481-11, Gasan-Dong,
Geumcheon-Gu, Seoul, Korea
TEL : (822)2163-0060~0065
FAX : (822)2163-0066
E-mail : belton@unitel.co.kr

REVERBERATION UNIT
ROTARY SWITCH
ENCODER SWITCH
VACUUM TUBE SOCKET & SHIELD
POWER ENTRY
JACK & XLR SOCKET

Combination jack block with 3 poles XLR female socket + double 1/4″ phone jacks

Features

- Fine formed and technical treatment for safety contact with the block construction of 3 ploes XLR female socket + double 1/4″ phone jack
- Block construction improve assembly process by reducing the screw mounting operation
- Good insulation with glass filled thermoplastics
- Space and labor saving design

PATENT

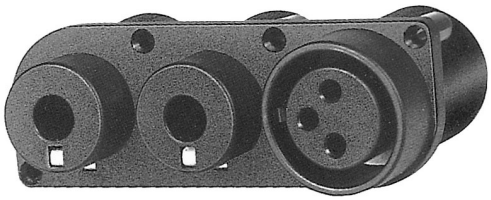

Applications

- Applicable to all types of electronic music instruments like as mixing console, graphic equalizer and stereo amplifier etc.

Dimensions

XLF2PV-□□□□

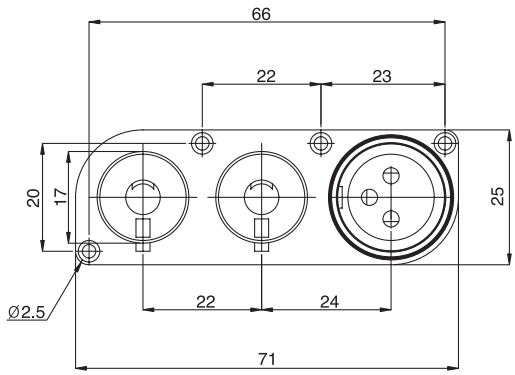

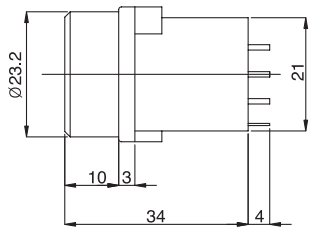

Bottom View

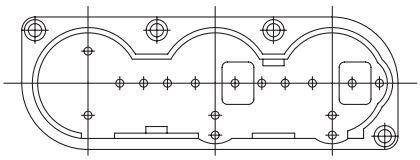

P.C.B Mounting Hole

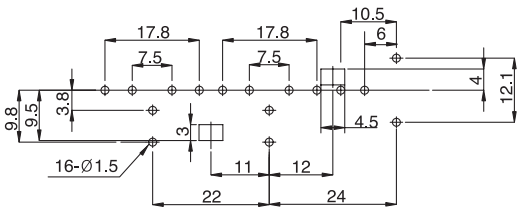

Belton Engineering Co., Ltd.

Unit 1208, Daerung Techno town 8,
481-11, Gasan-Dong,
Geumcheon-Gu, Seoul, Korea

TEL : (822)2163-0060~0065
FAX : (822)2163-0066
E-mail : belton@unitel.co.kr

COMBINATION JACK

(XLF2PV SERIES) **CAT. NO.: XLF2PV-2**

Specifications of Phone jack series

MODEL NO.	07	06	05	04	03	02	01
SCHEMATIC CIRCUIT WITHOUT XLR SOCKET CIRCUITS	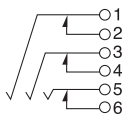	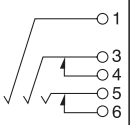	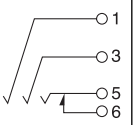	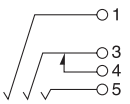	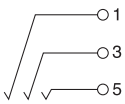	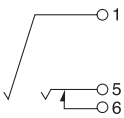	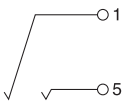

General Specifications

- Electrical life: 10,000 cycles min.
- Contact Resistance: 20 mohms max.
- Contact Rating: 10A, 48V DC
- Capacitance: XLR≤3pF, JACK≤5pF
- Insulation Resistance: Over 100 Mohms, 500V DC
- Dielectric Withstanding Voltage: 1min. at 500V AC
- Insertion/Withdrawal Force: 3~5 kgf · cm
- Operating Temperature: -20~ +60°C

Suggested ordering code

Ex. **XLF2PV - 03 - 03**

Series

2nd Phone Jack

MODEL	Refer to specification						
Code	07	06	05	04	03	02	01

1st Phone Jack

MODEL	Refer to specification						
Code	07	06	05	04	03	02	01

Belton Engineering Co., Ltd.
Unit 1208, Daerung Techno town 8,
481-11, Gasan-Dong,
Geumcheon-Gu, Seoul, Korea
TEL : (822)2163-0060~0065
FAX : (822)2163-0066
E-mail : belton@unitel.co.kr

Combination jack with 3 poles XLR socket + 1/4″ phone jack

Features

- Fine forming and treatment for safety contact with the construction of locking or non-locking XLR socket
- Good insulation with glass filled thermoplastics
- Space and labor saving design

Applications

- Applicable to all types of electronic music instruments like as mixing console, graphic equalizer and stereo amplifier etc.

Dimensions

CXLF-□□

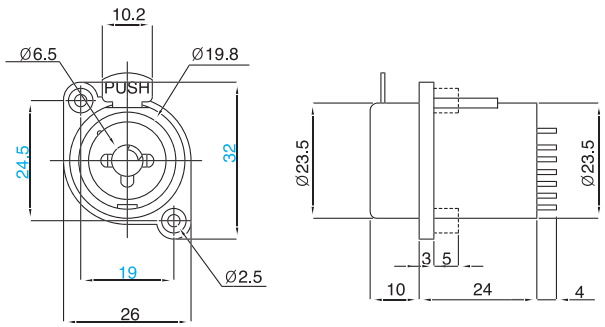

P.C.B Mounting Hole

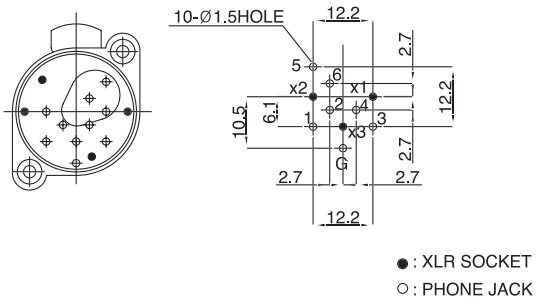

CXLF Series

MODEL NO.	CXLF-07	CXLF-06	CXLF-05	CXLF-04	CXLF-03	CXLF-02	CXLF-01
SCHEMATIC CIRCUIT WITHOUT XLR SOCKET CIRCUITS	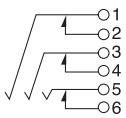	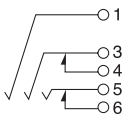	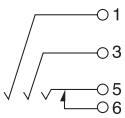	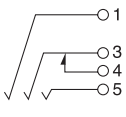	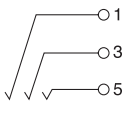	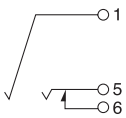	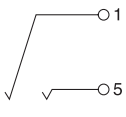

General Specifications

- Electrical life: 10,000 cycles min.
- Contact Resistance: 20 mohms max.
- Contact Rating: 10A, 48V DC
- Capacitance: XLR≤3pF, JACK≤5pF
- Insulation Resistance: Over 100 Mohms
- Dielectric Withstanding Voltage : 500V AC
- Insertion/Withdrawal Force: 1 ~ 5 kgf · cm
- Operating Temperature: -20° ~ +60° C

Belton Engineering Co., Ltd.

Unit 1208, Daerung Techno town 8,
481-11, Gasan-Dong,
Geumcheon-Gu, Seoul, Korea

TEL : (822)2163-0060~0065
FAX : (822)2163-0066
E-mail : belton@unitel.co.kr

Combination jack with 3 poles XLR socket + 1/4″ Phone jack(Vertical mounting type)

NEW

Features

- Fine forming and treatment for safety contact with the locking or non-locking construction of XLR socket
- Good insulation with glass filled thermoplastics

Applications

- Applicable to all types of electronic music instruments like as mixing console, graphic equalizer and stereo amplifier etc.

Dimensions

CXLFN-V□□

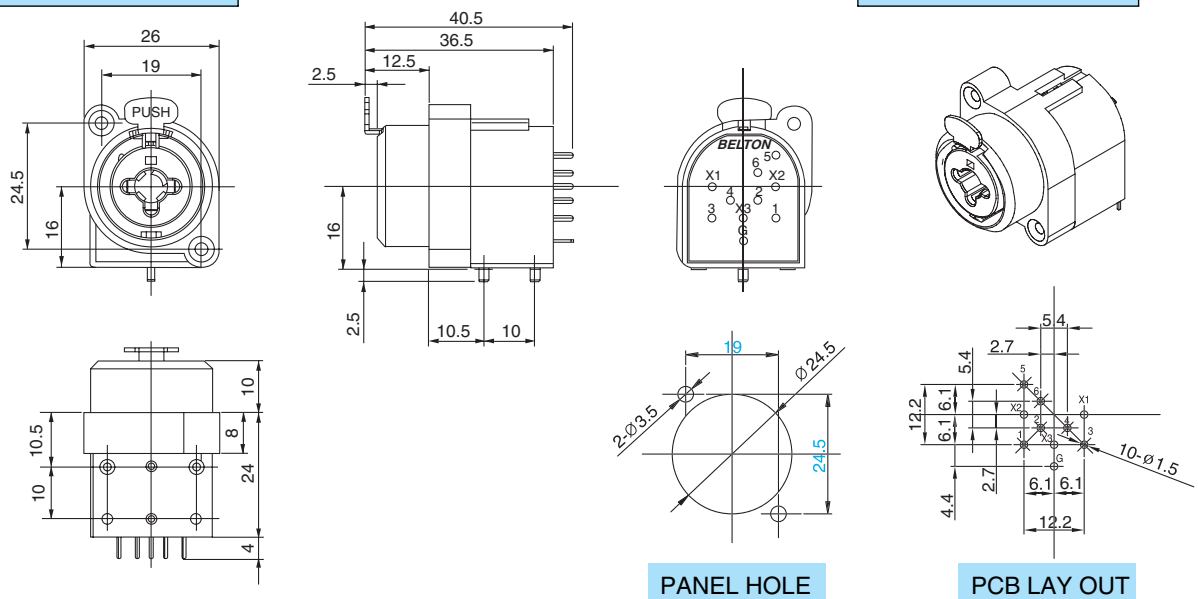

P.C.B Mounting Hole

PANEL HOLE

PCB LAY OUT

CXLFN-H Series

MODEL NO.	CXLFN-V07	CXLFN-V06	CXLFN-V05	CXLFN-V04	CXLFN-V03	CXLFN-V02	CXLFN-V01
SCHEMATIC CIRCUIT WITHOUT XLR SOCKET CIRCUITS	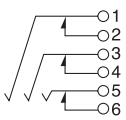	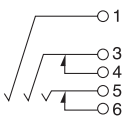	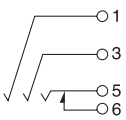	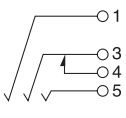	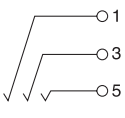	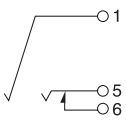	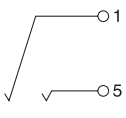

Genaral Specifications

- Please refer to the CXLF specification on the 81 pge

Belton Engineering Co., Ltd.

Unit 1208, Daerung Techno town 8,
481-11, Gasan-Dong,
Geumcheon-Gu, Seoul, Korea

TEL : (822)2163-0060~0065
FAX : (822)2163-0066
E-mail : belton@unitel.co.kr

REVERBERATION UNIT
ROTARY SWITCH
ENCODER SWITCH
VACUUM TUBE SOCKET & SHIELD
POWER ENTRY
JACK & XLR SOCKET

Combination jack with 3 poles XLR socket + 1/4″ Phone jack(Horizonal mounting type)

NEW

Features

- Fine forming and treatment for safety contact with the locking or non-locking construction of XLR socket
- Good insulation with glass filled thermoplastics

Applications

- Applicable to all types of electronic music instruments like as mixing console, graphic equalizer and stereo amplifier etc.

Dimensions

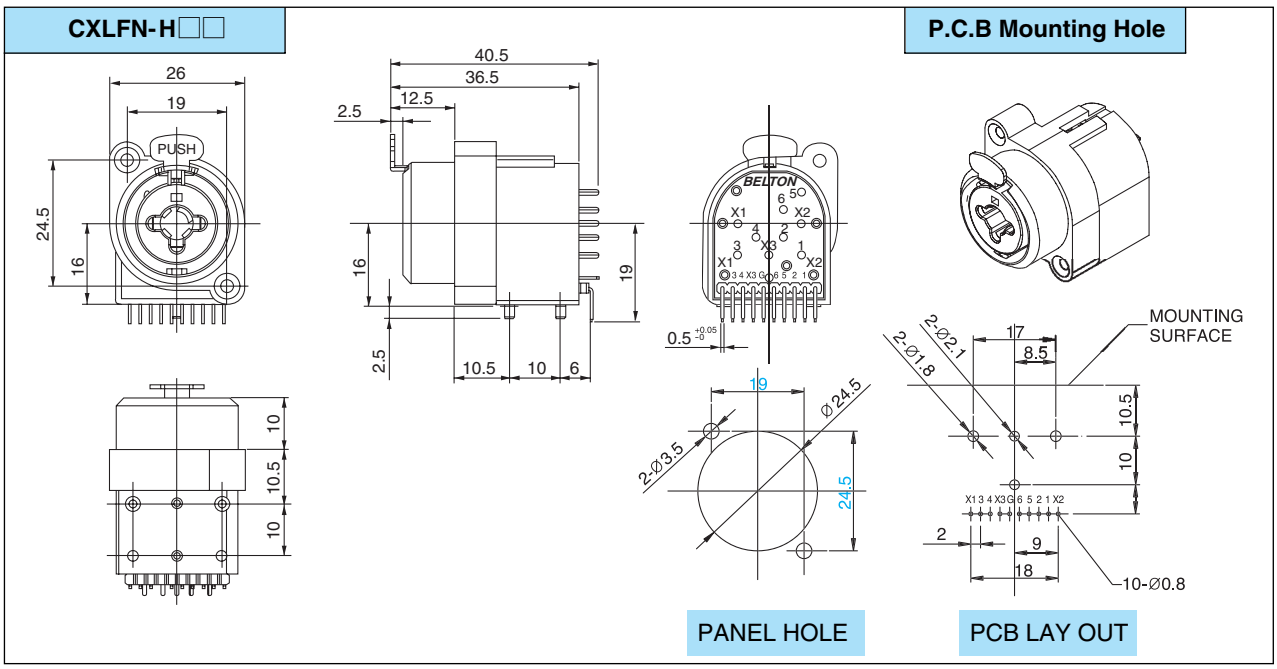

CXLFN-H Series

MODEL NO.	CXLFN-H07	CXLFN-H06	CXLFN-H05	CXLFN-H04	CXLFN-H03	CXLFN-H02	CXLFN-H01
SCHEMATIC CIRCUIT WITHOUT XLR SOCKET CIRCUITS	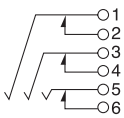	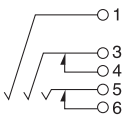	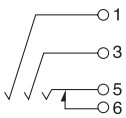	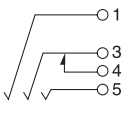	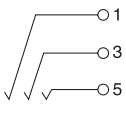	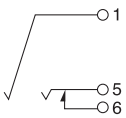	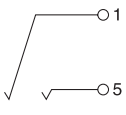

Genaral Specifications

- Please refer to the CXLF specification on the 81 pge

Belton Engineering Co., Ltd.

Unit 1208, Daerung Techno town 8,
481-11, Gasan-Dong,
Geumcheon-Gu, Seoul, Korea

TEL : (822)2163-0060~0065
FAX : (822)2163-0066
E-mail : belton@unitel.co.kr

SPEAKER CONNECTOR

(BTSP SERIES)

CAT. NO.: BTSP-1

Designed for easy connection with male speaker connector

Features

- 4 poles connector with sleeve and multiple finger contact construction
- P.C.Board terminal and easy assemble with snap-in terminal

Applications

- For all kinds of loud-speaker and amplifier connector

Dimensions

BTSP-01

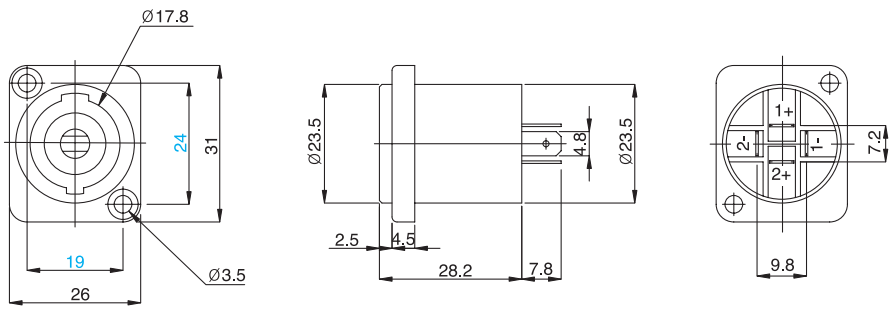

Unit : mm

BTSP-02

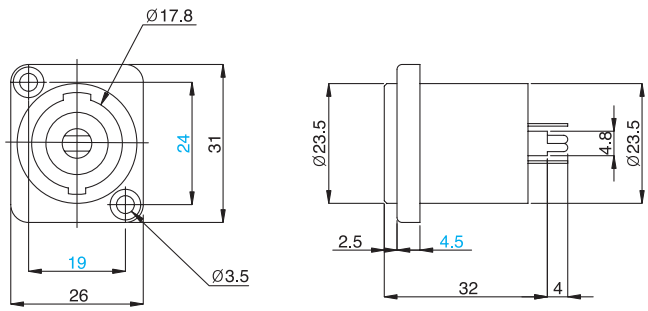

P.C.B Mounting Hole

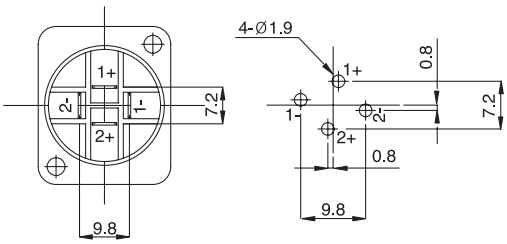

General Specifications

- Electrical Rating: 30A, 12V(source)
- Operating voltage : 250V AC
- Contact Resistance : 20 mohms
- Insulation Resistance : Over 100 Mohms
- Withstanding Voltage : 1min. at 500V AC
- Electrical Life : 10,000 cycles
- Operating Temperature : -30° C ~ 80° C

Belton Engineering Co., Ltd.

Unit 1208, Daerung Techno town 8,
481-11, Gasan-Dong,
Geumcheon-Gu, Seoul, Korea

TEL : (822)2163-0060~0065
FAX : (822)2163-0066
E-mail : belton@unitel.co.kr

SPEAKER CONNECTOR

(BTSP SERIES)

CAT.NO.: BTSP-2

Designed for easy connection with male speaker connector on the speaker cabinet

Features

- 4 poles connector with sleeve and multiple finger contact construction
- P.C.Board terminal and easy assemble with snap-in terminal

Applications

- For all kinds of loud-speaker and amplifier connector

Dimensions

BTSP-01R

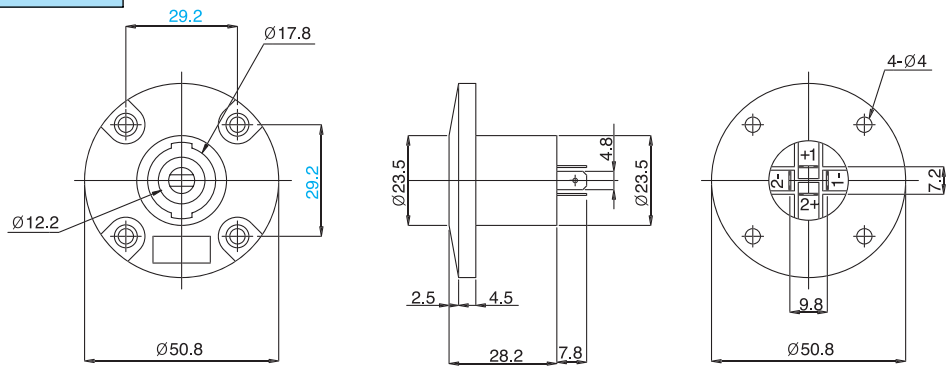

BTSP-02

P.C.B Mounting Hole

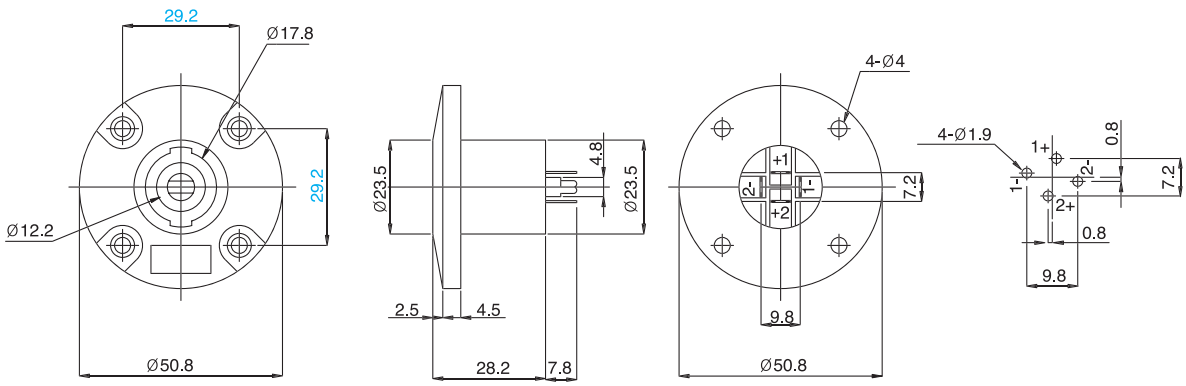

General Specifications

- Electrical Rating: 30A, 12V(source)
- Operating voltage : 250V AC
- Contact Resistance : 20 mohms
- Insulation Resistance : Over 100 Mohms 500V DC
- Withstanding Voltage : 1min. at 500V AC
- Electrical Life : 10,000 cycles
- Operating Temperature : -30° C~ 80° C

Belton Engineering Co., Ltd.

Unit 1208, Daerung Techno town 8,
481-11, Gasan-Dong,
Geumcheon-Gu, Seoul, Korea

TEL : (822)2163-0060~0065
FAX : (822)2163-0066
E-mail : belton@unitel.co.kr

Memorandum

Belton Engineering Co., Ltd.

Unit 1208, Daerung Techno town 8,
481-11, Gasan-Dong,
Geumcheon-Gu, Seoul, Korea

TEL : (822)2163-0060~0065
FAX : (822)2163-0066
E-mail : belton@unitel.co.kr

오디오 부품 및 소형 스위치. 잭은 전문업체인 벨톤으로...

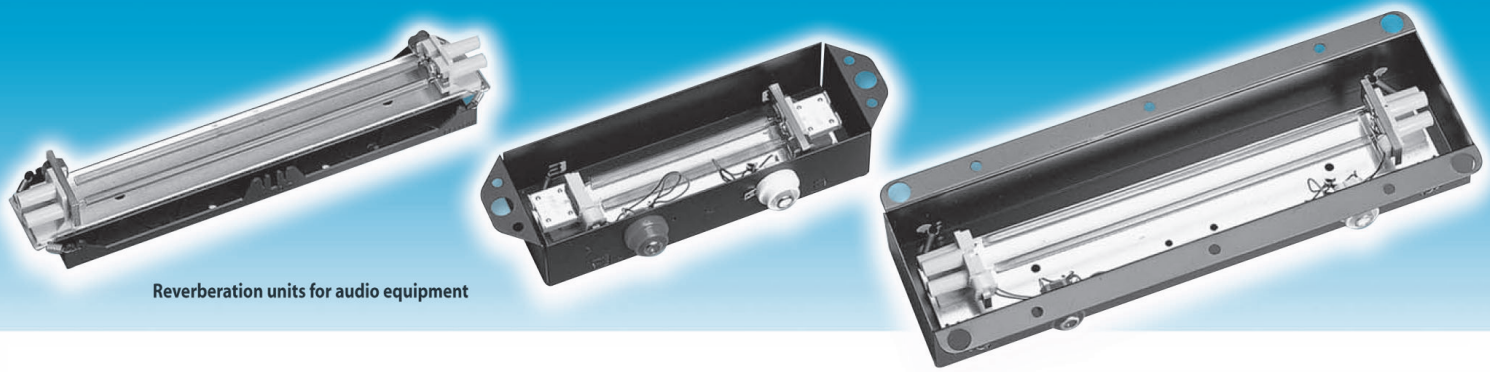

Reverberation units for audio equipment

30년간의 전문 경험으로 미국의 Peavey, Fender, SLME 등과 영국의 Marshall, Trace Elliet에 품질과 정확한 납기로 꾸준히 신용을 받고 있습니다.

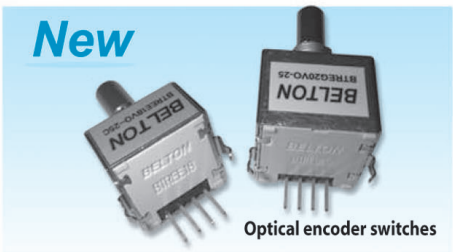

Optical encoder switches

Digital sound effector

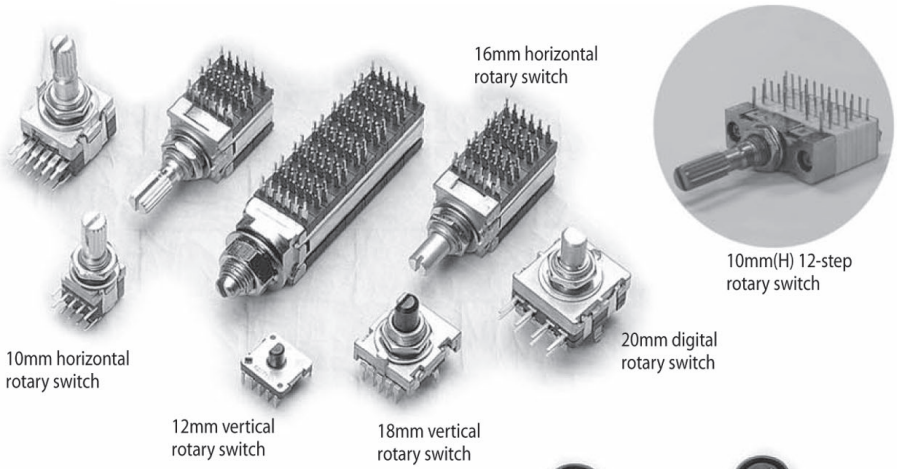

UL/CSA/TUV-approved ACINLET and fuse holder

1. 24mm rotary switch
2. Tube shield
3. 8-pin/9-pin tube socket
4. 10mm digital rotary switch

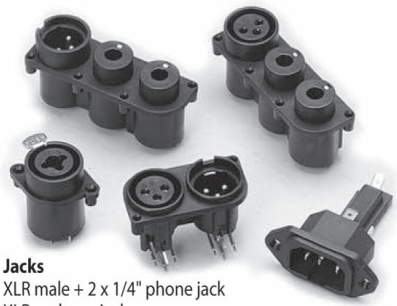

Jacks
XLR male + 2 x 1/4" phone jack
XLR + phone jack
XLR female + male jack
AC inlet + fuse holder

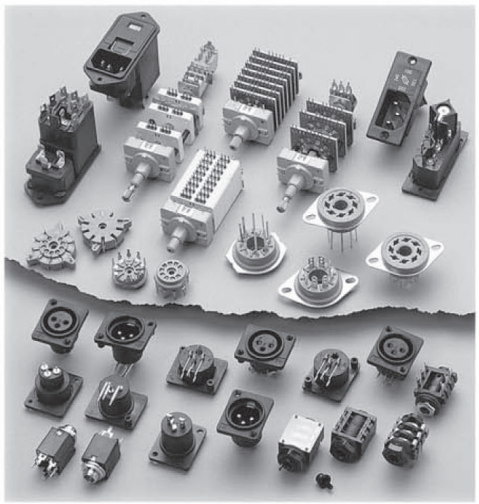

XLR sockets, AC inlets, rotary switches and vacuum tube sockets for musical instruments

(株) 벨톤 研究所
BELTON ENGINEERING CO., LTD.

UNIT 1208, DAERUNG TECHNO TOWN 8, 481-11 GASAN-DONG GEUMCHEON-GU, SEOUL, KOREA TEL:82-2-2163-0060-5 FAX:82-2-2163-0066 E-MAIL:belton@unitel.co.kr HOMEPAGE:http://wwww.belton.co.kr

20년 동안 축적된 기술로
전 주문생산의 90%를 수출하고 있으며,
그 품질을 세계적으로 인정받고 있습니다.

광학식(光學式) 로터리 엔코더 스위치

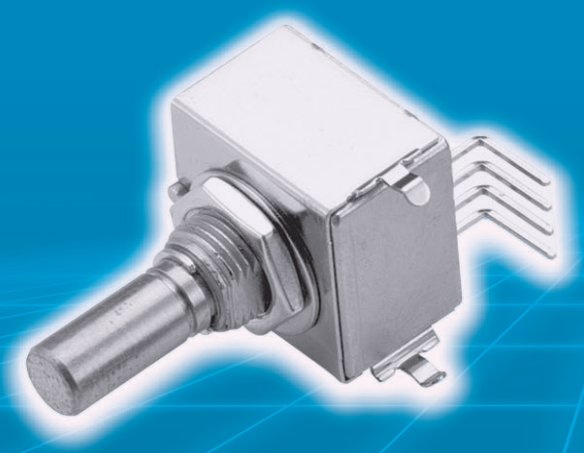

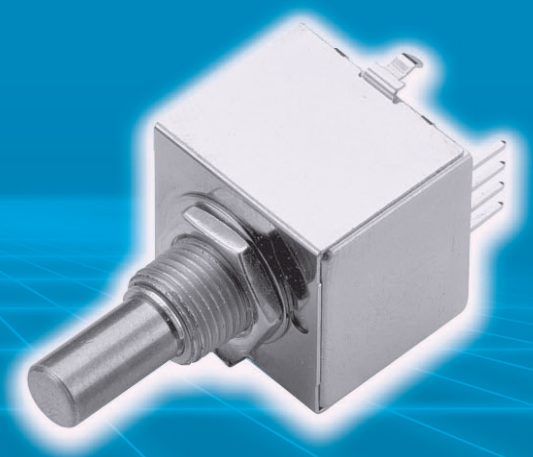

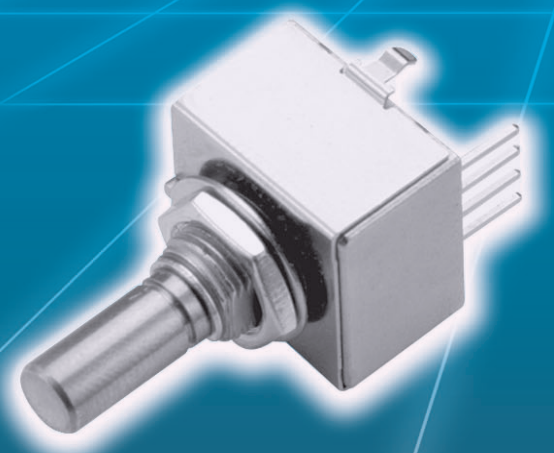

18mm

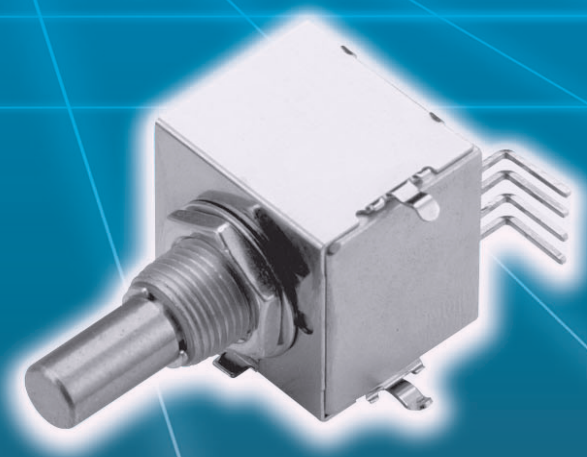

20mm

- 기초성능

외형	18mm	20mm
구조	반사형(反射形)동작	직사형(直射形)동작
Plus 수	25 고정/1회전	25, 50, 75, 100, 150/1회전
수명	100만회 이상	100만~1,000만회 이상

(株) 벨톤 研究所
BELTON ENGINEERING CO., LTD

住所 : 우153-803 서울特別市 衿川區 加山洞
481-11 대륭 테크노타운 8차, 12층 8호
Unit 1208, Daerung Techno town 8,
481-11, Gasan-Dong,
Geumcheon-Gu, Seoul, Korea

TEL : 82-2-2163-0060~5
FAX : 82-2-2163-0066
E-mail : belton@unitel.co.kr
Home page : http://www.belton.co.kr

(株)벨톤研究所

BELTON ENGINEERING CO., LTD.

Unit 1208, Daerung Techno town 8, 481-11, Gasan-Dong,
Geumcheon-Gu, Seoul, Korea
TEL : (822)2163-0060-0065
FAX : (822)2163-0066
E-mail : belton@unitel.co.kr